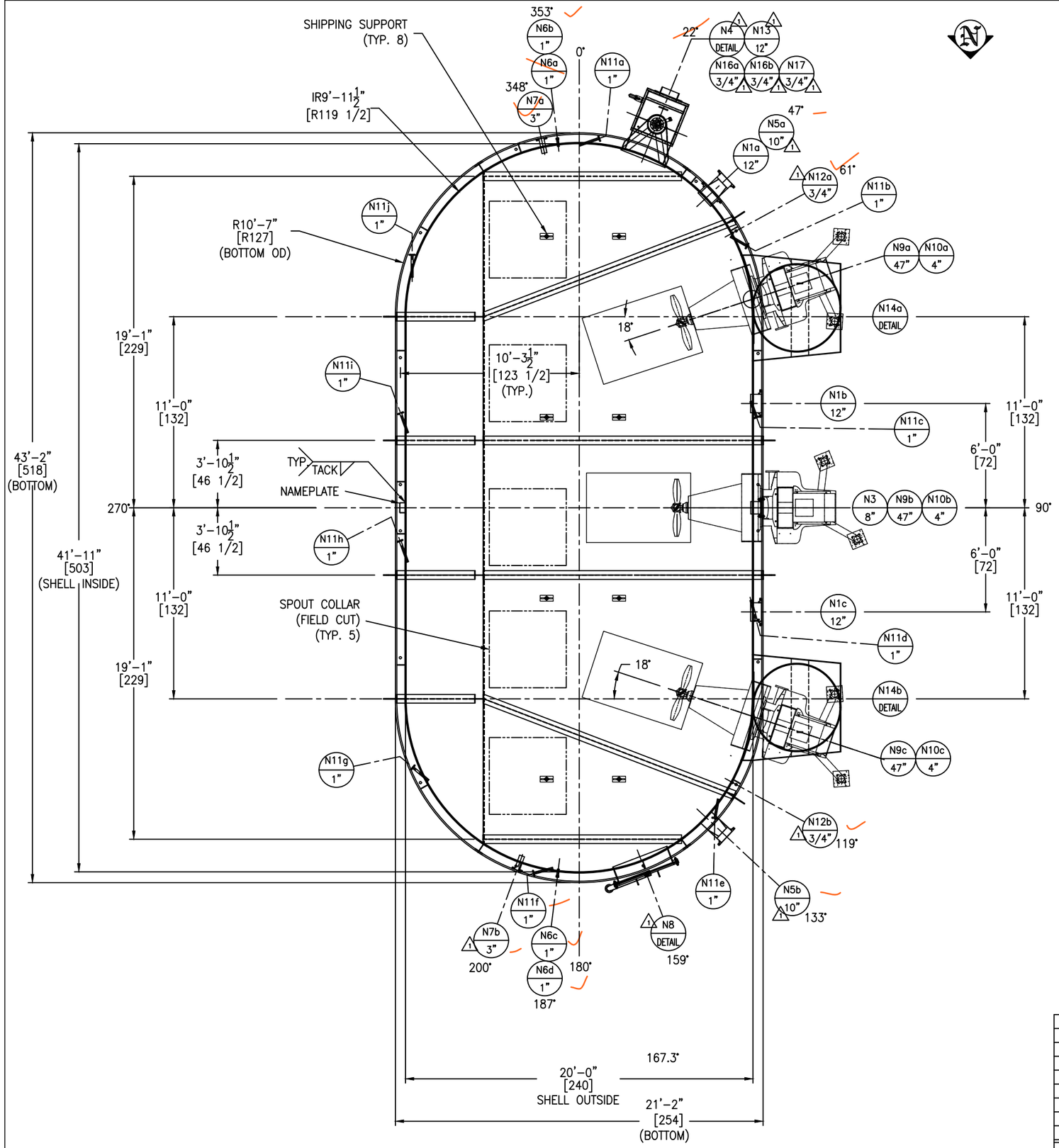

PLAN VIEW

GENERAL NOTES:

- SEE SHEET#8 FOR N11a–j (SPARGER) NOZZLE LOCATIONS AND DETAILS.
- SEE SHEET#4 FOR STIFFENER LOCATIONS AND DETAILS.
- SEE SHEET#8 FOR ANCHOR HOLE AND GUSSET LOCATIONS AND DETAILS.
- SEE SHEET #13 FOR SHIPPING SUPPORT LOCATION AND DETAILS.

FABRICATION NOTES:△1

- DO NOT CUT HOLES FOR SPOUT COLLARS ON THE ROOF PLATE. ETCH MARK THE CENTERLINES.
- DO NOT CUT HOLES FOR STACK CONNECTION ON SHELL PLATE. ETCH MARK THE SAME.
- AGITATOR (N9a/b/c) & NOZZLES N10a/b/c WILL BE PROVIDED BY OTHERS INSTALLED BY SAVANNAH TANK.
- WALL RINGS WILL BE INSTALLED WITH FIXTURES TO ENSURE ALIGNMENT
- TOP SUPPORTS WILL BE SHOP FIT AT FINAL ASSEMBLY

SEE SHEET#2 FOR NDE:△1

SHIPPED LOOSE:△1

(2 PC) TANK SPLIT INTO TWO PIECES.
(2 PC) STACK CONNECTION (N14a & N14b)
(2 PC) OVERFLOW & LOWER BOX
(6 PC) ROOF LEVEL 2 STIFFENERS
(2) 193 3/16" LONG
(2) 186 5/8" LONG
(2) 137 5/32" LONG
(4 PC) 1/8" X 6" X 12' (SS304) BACKING STRIP

Valmet

Resubmit

Reviewed With Comments | Released for Fabrication

By Pierre Borduas on Dec 09, 2025

This review does not supersede requirements of purchase order, design drawings, specifications, codes or regulations. The contractor / supplier is not relieved from responsibility for errors or omission.

△1 VALMET DOC ID: MF00997507_0

REV	D.BY	C.BY	DATE	DESCRIPTION
2				AS BUILT
1	RS	NP	11/28/25	CERTIFIED
0	RS	AD	9/15/25	APPROVAL

△1 REVISIONS

Savannah Tank & Equipment Corp.
1517 Telfair Road, Savannah, GA 31415
(912) 233-8902

DRAWN BY: RS
CHK'D BY: AD
APPROVED BY: NP
SCALE: 1/4" = 1'-0"

VALMET
DISSOLVING TANK
EQUIP. #
CUST. PO #S30019941

DRAWING NO.: 089-25-1 SHT 1 OF 14 REV. SET 1

MATERIALS OF CONSTRUCTION

	VESSEL
SHELL	SA240-AL2205
ROOF / BOTTOM	SA240-AL2205
OVERFLOW BOX ASSEMBLY	SS304/304L
NOZZLE NECKS	SA790-AL2205 WLD
NOZZLE FLANGES	SA182F-AL2205
MANWAY NECKS	SA240-AL2205
MANWAY FLANGE / COVER	SA36 & SA240-AL2205
ANCHOR GUSSET	SA240-304/304L
BOLTS/STUDS	SA193-B8
NUTS	SA194-8
REPADS	SA240-304/304L
COUPLINGS	SA182F-AL2205
SHIPPING SUPPORTS	SA53B-ERW & SA240-304/304L
LIFTING LUGS	SA36
STACK CONNECTION	SA240-AL2205
INSULATION RINGS	-
GROUND LUG	SA240-304/304L
ROOF/SHELL STIFFENERS	SA36

DESIGN DATA

	VESSEL
DESIGN AND FAB. CODE	API 650
CERT. STAMP REQ'D.	N/A
DESIGN PRESSURE	-
DESIGN TEMPERATURE	-
MIN. DESIGN METAL TEMP.	-
OPERATING PRESSURE	-
OPERATING TEMPERATURE	190° F
JOINT EFFICIENCY HEADS	0.70
JOINT EFFICIENCY SHELL	0.70
CORROSION ALLOWANCE	-
SPECIFIC GRAVITY	-
EARTHQUAKE ZONE	Ss = (-) S1 = (-)
WIND LOAD	-
STRESS RELIEF	NOT REQ'D
RADIOGRAPHIC EXAM	(10% OF SEAMS) SEE NOTE 7
DYE PENETRANT EXAM	(ALL NOZZLES) SEE NOTE 8
VACUUM BOX	(ROOF&BOTTOM SEAMS) SEE NOTE 9
HYDROSTATIC TEST	-

VESSEL FINISH

INTERIOR WELD TREATMENT:	SAV TANK STANDARD
EXTERIOR WELD TREATMENT:	SAV TANK STANDARD
SAV TANK FINISHING STANDARD:	SEE NOTE 6
INSULATION:	N/A
PAINTING:	SEE NOTE 10

VESSEL CAPACITY AND WEIGHTS

OPERATING CAPACITY	44,600 GAL. (@8' LIQUOR LEVEL)
FULL CAPACITY	62,000 GAL.
EMPTY SHIPPING WEIGHT	93,850 LBS.
WEIGHT FULL OF WATER	612,100 LBS
WEIGHT FULL OF PRODUCT	612,100 LBS

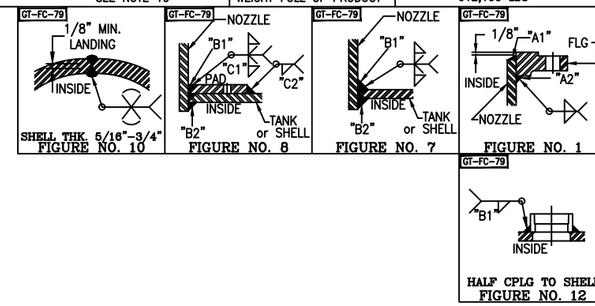

NOZZLE SCHEDULE

MARK	SERVICE	SIZE	RATING	TYPE / STYLE	NECK SCHED.	PROJECTION EXT. (℄)	PROJECTION INT. (MIN.)	WELD FIGURE	REPAD SIZE (WIDTH X THK.)	WELD SIZE "A1"	"A2"	"B1"	"B2"	"C1"	"C2"
N1a	PUMP SUCTION CONN.	12"	150#	RFSO	40S	6"	1"	1,8	4 1/2" X 1/4"	1/4	1/4	1/4	1/4	1/4	1/4
N1b	PUMP SUCTION CONN.	12"	150#	RFSO	40S	6"	1"	1,8	4 1/2" X 1/4"	1/4	1/4	1/4	1/4	1/4	1/4
N1c	PUMP SUCTION CONN.	12"	150#	RFSO	40S	6"	1"	1,8	4 1/2" X 1/4"	1/4	1/4	1/4	1/4	1/4	1/4
N3	MAKE UP CONN.	8"	150#	RFSO W/ BLIND	40S	6"	1"	1,8	2 1/8" X 1/4"	1/4	1/4	1/4	1/4	1/4	1/4
N4	1 OVERFLOW CONN.	32X20"	-	-	1/4"	SEE DWG	-	SEE DWG	2 1/2" X 1/4"	SEE DETAIL ON SHEET#					
N5a	FLOOR DRAIN	10"	150#	RFSO	40S	19 3/4"	5"	1,8	4 1/2" X 1/4"	1/4	1/4	1/4	1/4	1/4	1/4
N5b	FLOOR DRAIN	10"	150#	RFSO	40S	19 3/4"	5"	1,8	4 1/2" X 1/4"	1/4	1/4	1/4	1/4	1/4	1/4
N6a	DENSITY CONN.	1"	-	TOE PIPE	160S	4 3/16"	1"	7	-	-	-	1/8	1/8	-	-
N6b	DENSITY CONN.	1"	-	TOE PIPE	160S	4 3/16"	1"	7	-	-	-	1/8	1/8	-	-
N6c	DENSITY CONN.	1"	-	TOE PIPE	160S	4 3/16"	1"	7	-	-	-	1/8	1/8	-	-
N6d	DENSITY CONN.	1"	-	TOE PIPE	160S	4 3/16"	1"	7	-	-	-	1/8	1/8	-	-
N7a	LEVEL TRANSMITTER	3"	150#	RFSO	40S	6"	1 4"	1,8	2" X 1/4"	3/16	3/16	3/16	3/16	1/4	1/4
N7b	LEVEL TRANSMITTER	3"	150#	RFSO	40S	6"	1 4"	1,8	2" X 1/4"	3/16	3/16	3/16	3/16	1/4	1/4
N8	CLEAN OUT DOOR	40x72"	-	-	-	10"	1"	8	6 1/4" X 1/2"	-	-	5/16	5/16	1/2	1/2
N9a	AGITATOR-1	47"	***** BY OTHERS *****			SEE DWG	1"	8	7 1/2" X 1/2"	-	-	5/16	5/16	1/2	1/2
N9b	AGITATOR-2	47"	***** BY OTHERS *****			SEE DWG	1"	8	7 1/2" X 1/2"	-	-	5/16	5/16	1/2	1/2
N9c	AGITATOR-3	47"	***** BY OTHERS *****			SEE DWG	1"	8	7 1/2" X 1/2"	-	-	5/16	5/16	1/2	1/2
N10a	AGITATOR-1 WEAK WASH	***** BY OTHERS (PART OF AGITATOR ASSEMBLY)*****													
N10b	AGITATOR-1 WEAK WASH	***** BY OTHERS (PART OF AGITATOR ASSEMBLY)*****													
N10c	AGITATOR-1 WEAK WASH	***** BY OTHERS (PART OF AGITATOR ASSEMBLY)*****													
N11(a-j)	SPARGER NOZZLE	1"	150#	RFSO (10 REQ'D)	160S	SEE DWG	1 1/8"	1,7	-	1/8	1/8	1/8	1/8	-	-
N12a	TEMPERATURE CONN.	3/4"	3000#	HALF THRD CPLG	-	-	-	12	-	-	-	1/8	-	-	-
N12b	TEMPERATURE CONN.	3/4"	3000#	HALF THRD CPLG	-	-	-	12	-	-	-	1/8	-	-	-
1 N13	OVERFLOW DRAIN	12"	-	PIPE ONLY	40S	-	-	SEE DWG	-	-	-	1/4	-	-	-
N14a	STACK (CUT IN FIELD)	6'-1 1/2" X 4'-11 1/8" (SHOP FAB.)			1/2"	SEE DWG	-	SEE DWG	-	SEE DETAIL ON SHEET#					
N14b	STACK (CUT IN FIELD)	6'-1 1/2" X 4'-11 1/8" (SHOP FAB.)			1/2"	SEE DWG	-	SEE DWG	-	SEE DETAIL ON SHEET#					
1 N16a	TEMPERATURE CONN. (OVERFLOW)	3/4"	3000#	HALF THRD CPLG	-	-	-	12	-	-	-	1/8	-	-	-
1 N16b	TEMPERATURE CONN. (OVERFLOW)	3/4"	3000#	HALF THRD CPLG	-	-	-	12	-	-	-	1/8	-	-	-
1 N17	CONDUCTIVITY OVERFLOW	3/4"	3000#	HALF THRD CPLG	-	-	-	12	-	-	-	1/8	-	-	-
1 N18	FLUSH/CLEAN CONN.	***** BY OTHERS*****													

NOTE:7
X-RAY: 10% OF ALL SHELL WELDS.
SPOT X-RAY FOR NOZZLE N1a/b/c, N6a/c & N8 PER CODE.
NOTE:8 1
NOTE: DYE PEN - ALL NOZZLES ROOT FROM INSIDE & OUTSIDE. ALL NOZZLE FINAL JOINT FROM OUTSIDE. SHELL TO FLOOR WELD FROM INSIDE & SHELL BACKGRINDS.
NOTE:9
ALL ROOF & FLAT BOTTOM JOINTS TO BE VACUUM BOX TESTED.
NOTE:10
PAINTING - (ALL CARBON STEEL SUPPORTS, MANWAY FLANGE&COVER)
SANDBLAST SP6. (1) COAT MACROPOXY 646 (3-4 MILS) HASE GRAY PAINT.

ELEVATION VIEW

AGITATOR NOT SHOWN FOR CLARITY.

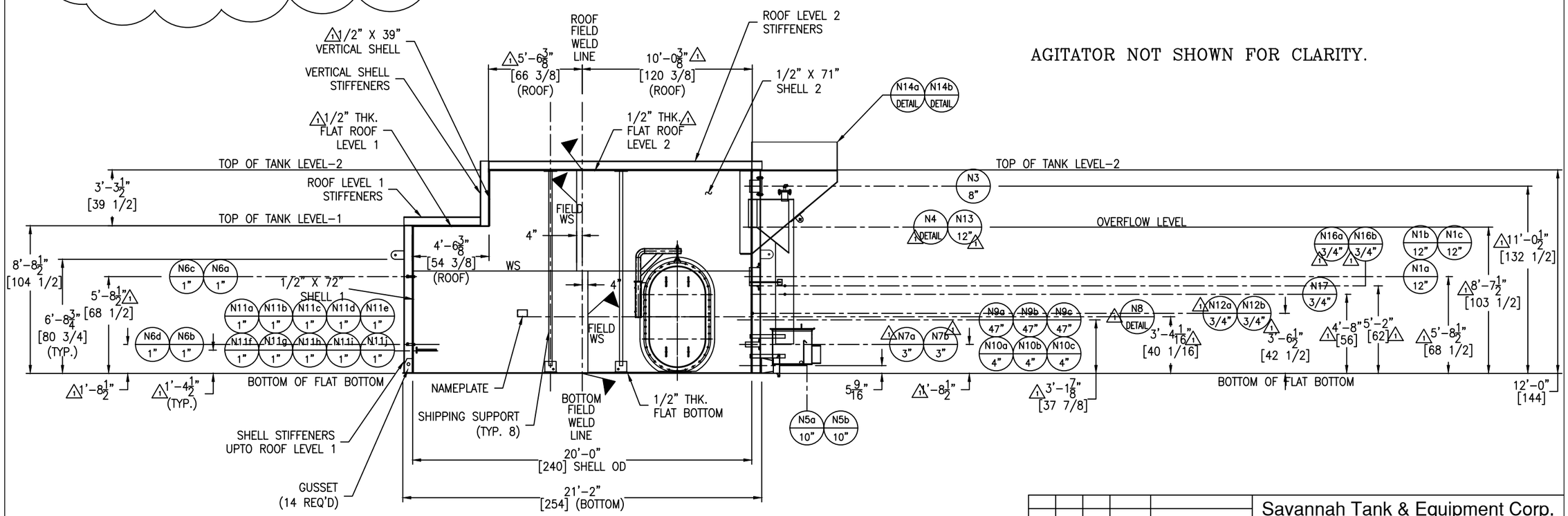

This drawing is issued for customer approval. please review, make approval changes (if any) in red. check the appropriate box, sign & date.

- ☐ Approval - no changes. Please proceed with fabrication.
- ☐ Approved as noted. Please proceed with fabrication
- ☐ Not approved. Please make changes and resubmit.

Customer signature _____ Date _____

GENERAL NOTES

1.) COVER ALL FLANGES, OPENINGS & MACHINED SURFACES PRIOR TO SHIPMENT UNLESS OTHERWISE NOTED.
2.) BOLT HOLES TO STRADDLE 0° & 180° UNLESS OTHERWISE NOTED.
3.) 1 (ONE) 1/4" TAPPED HOLE REQUIRE IN REINFORCING PLATE.
4.) ASME MATERIALS TO CONFORM TO THE FOLLOWING: FLANGES - B16.5, FITTINGS - B16.9 & COUPLINGS - B16.11.
6.) PICKLE ALL EXTERIOR WELDS. PASSIVATE INTERIOR & EXTERIOR OF VESSEL.
7.) X-RAY: 10% OF ALL ALL SHELL WELDS.
SPOT X-RAY FOR NOZZLE N1a/b/c, N6a/c & N8 PER CODE.
8.) DYE PEN - ALL NOZZLES FROM OUTSIDE @ PIPE TO SHELL WELD JOINT.
9.) ALL ROOF & FLAT BOTTOM JOINTS TO BE VACUUM BOX TESTED.
10.) PAINTING - (ALL CARBON STEEL SUPPORTS, MANWAY FLANGE & COVER)
SANDBLAST SP6. (1) COAT MACROPOXY 646 (3-4 MILS) HASE GRAY PAINT.

REV	D.BY	C.BY	DATE	DESCRIPTION
2				AS BUILT
1	RS	NP	11/28/25	CERTIFIED
0	RS	AD	9/15/25	APPROVAL

1 REVISIONS

Savannah Tank & Equipment Corp.
1517 Telfair Road, Savannah, GA 31415
(912) 233-8902

DRAWN BY: RS
CHK'D BY: AD
APPROVED BY: NP
SCALE: 1/4" = 1'-0"

VALMET
DISSOLVING TANK
EQUIP. #
CUST. PO #S30019941

DRAWING NO.: 089-25-2 SHT 2 OF 14 | REV. SET 1

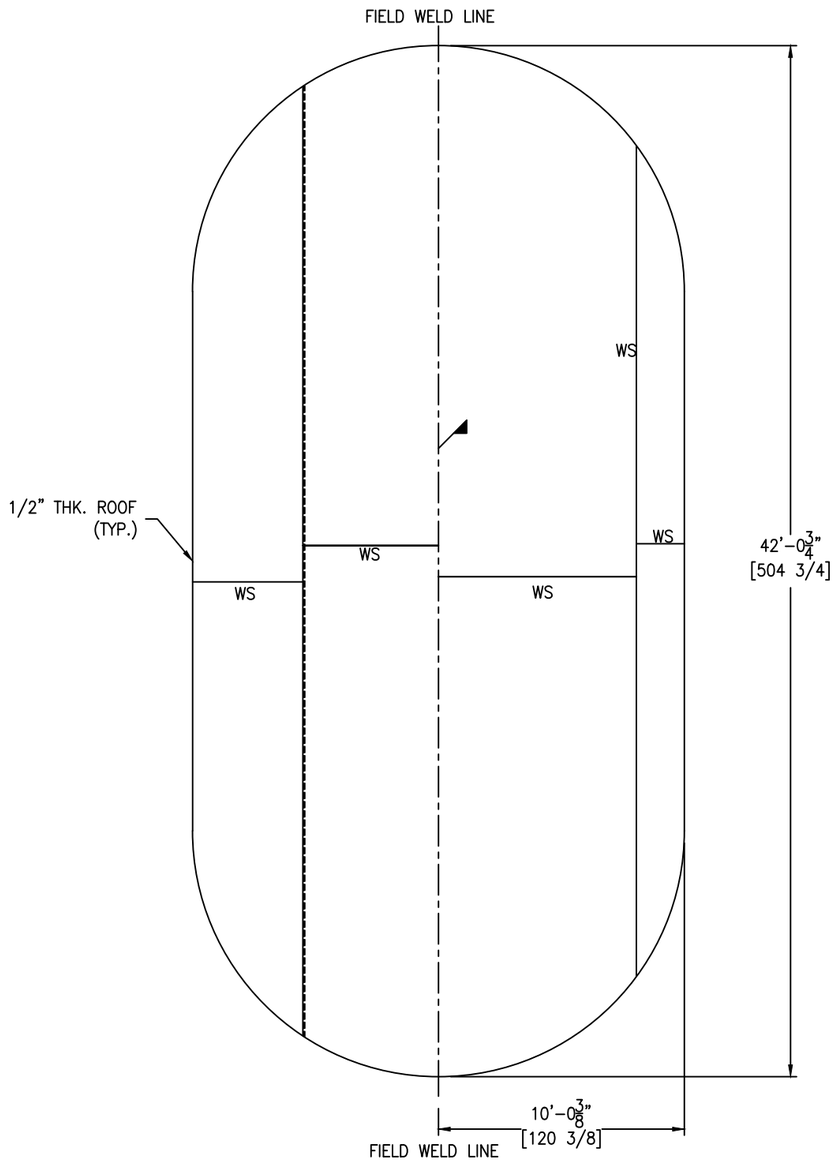

△1 ROOF LAYOUT DETAIL

SCALE: 1/4" = 1'-0"

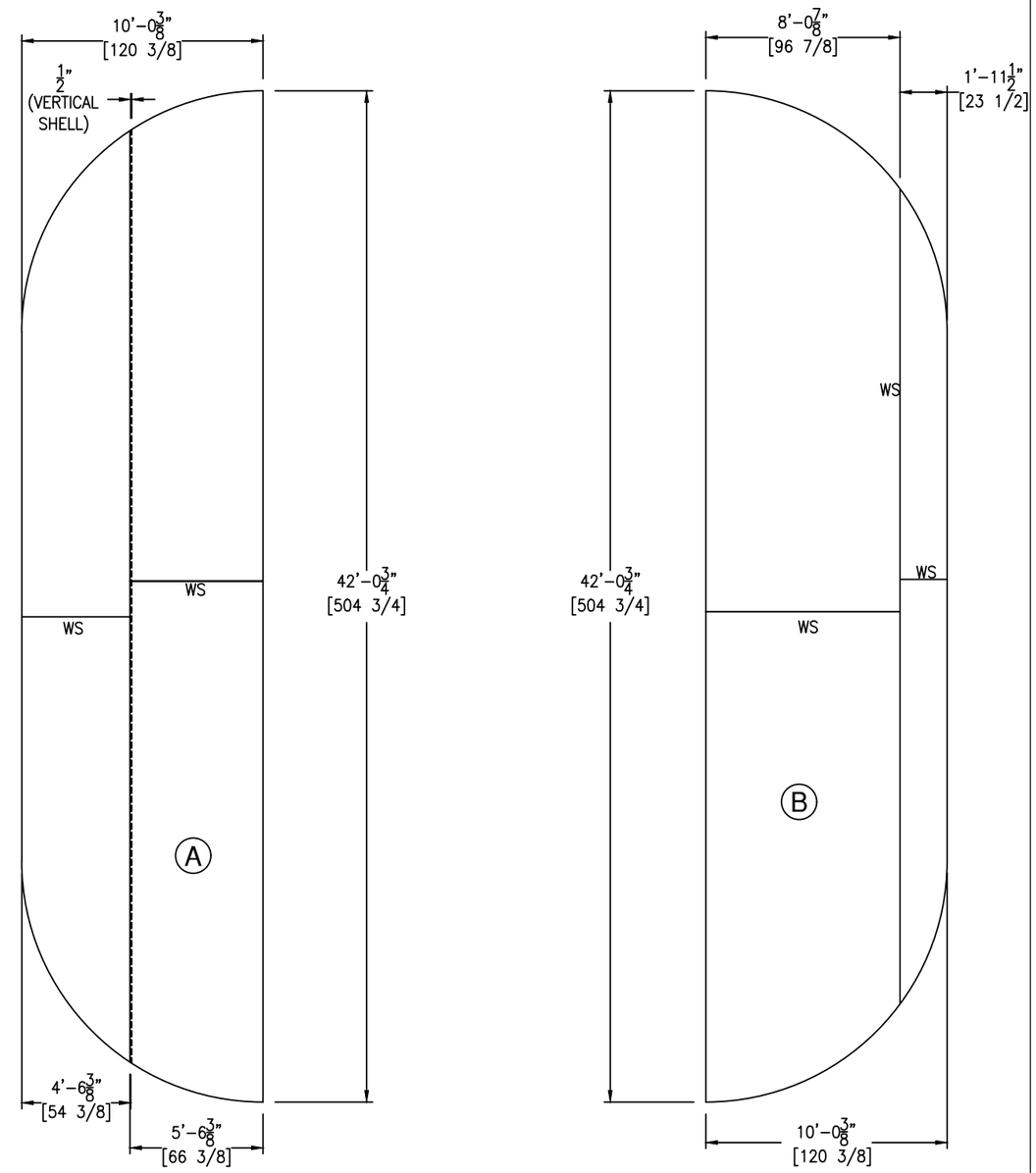

△1 ROOF SHIPPING LAYOUT DETAIL

SCALE: 1/4" = 1'-0"

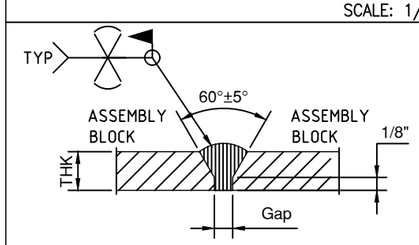

DETAIL FOR ROOF PLATE FIELD WELD

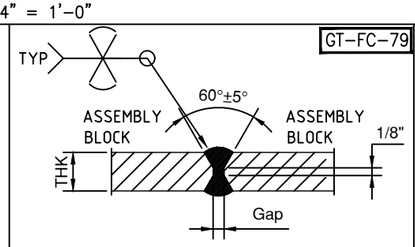

DETAIL FOR ROOF PLATE SHOP WELD

REV	D.BY	C.BY	DATE	DESCRIPTION
2				AS BUILT
1	RS	NP	11/28/25	CERTIFIED
0	RS	AD	9/15/25	APPROVAL

△1 REVISIONS

Savannah Tank & Equipment Corp.
1517 Telfair Road, Savannah, GA 31415
(912) 233-8902

DRAWN BY: RS
CHK'D BY: AD
APPROVED BY: NP
SCALE: 1/4" = 1'-0"

VALMET
DISSOLVING TANK
EQUIP. #
CUST. PO #S30019941

DRAWING NO.: 089-25-3 SHT 3 OF 14 | REV. SET 1

NOTE: STIFFENERS ON ROOF LEVEL 2 ARE SHIPPED LOOSE

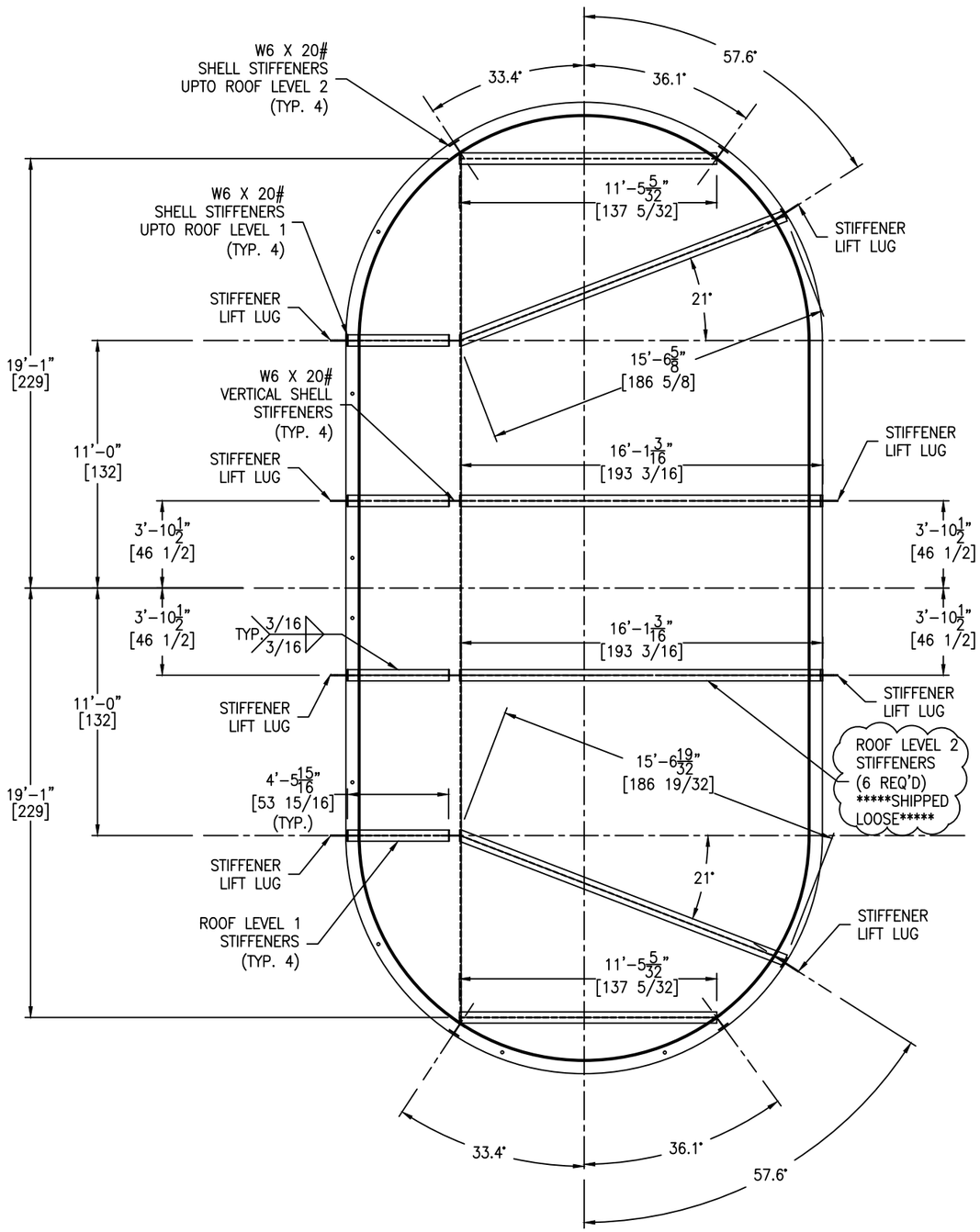

STIFFENER PLAN VIEW DETAIL

SCALE: 1/4" = 1'-0"

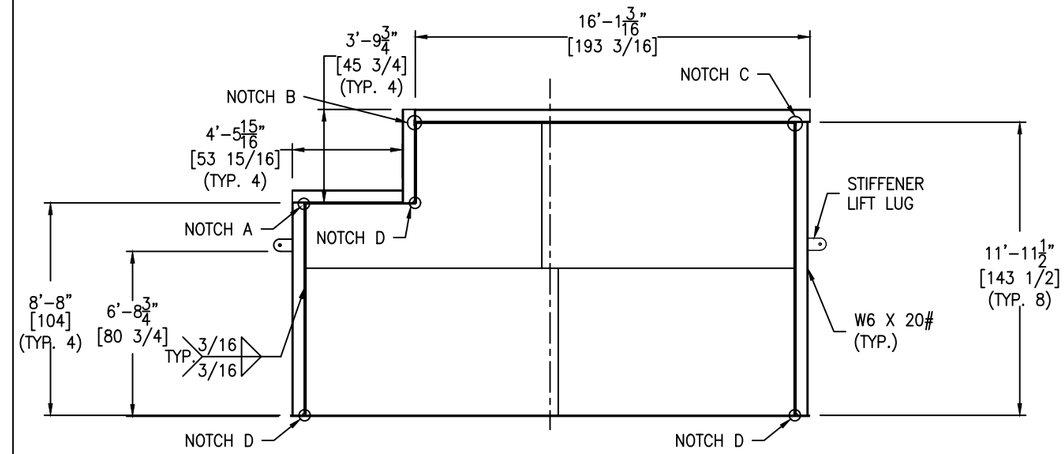

STIFFENER ELEVEATION VIEW DETAIL

SCALE: 1/4" = 1'-0"

FC-38

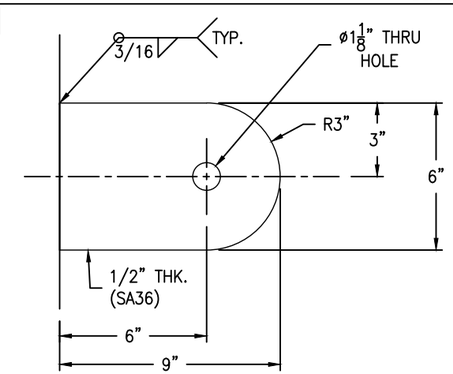

STIFFENER LIFT LUG DETAIL

(8 REQ'D) SCALE: 3" = 1'-0"

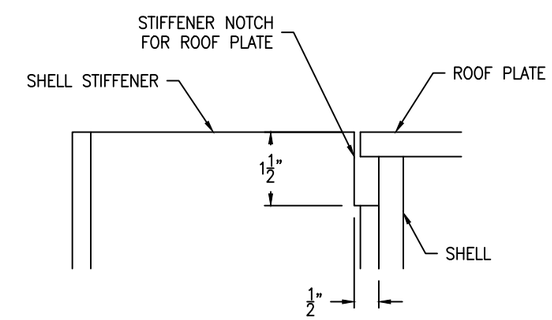

△1 NOTCH A DETAIL

SCALE: 6" = 1'-0"

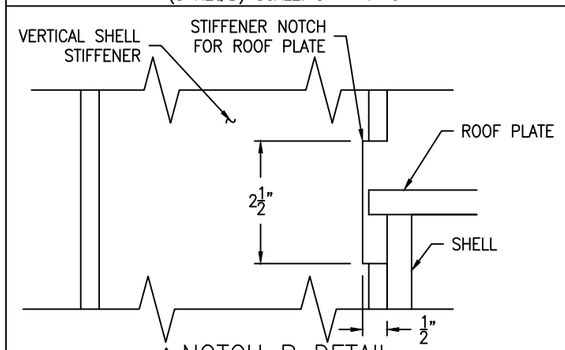

△1 NOTCH B DETAIL

SCALE: 6" = 1'-0"

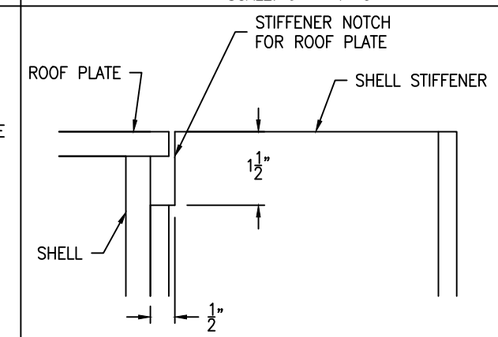

△1 NOTCH C DETAIL

SCALE: 6" = 1'-0"

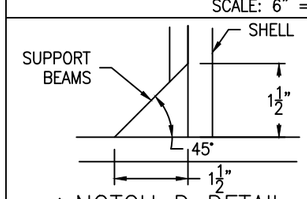

△1 NOTCH D DETAIL

SCALE: 6" = 1'-0"

REV	D.BY	C.BY	DATE	DESCRIPTION
2				AS BUILT
1	RS	NP	11/28/25	CERTIFIED
0	RS	AD	9/15/25	APPROVAL

△ REVISIONS

Savannah Tank & Equipment Corp.
1517 Telfair Road, Savannah, GA 31415
(912) 233-8902

DRAWN BY: RS
CHK'D BY: AD
APPROVED BY: NP
SCALE: 1/4" = 1'-0"

VALMET
DISSOLVING TANK
EQUIP. #
CUST. PO #S30019941

DRAWING NO.: 089-25-4 SHT 4 OF 14 REV. SET 1

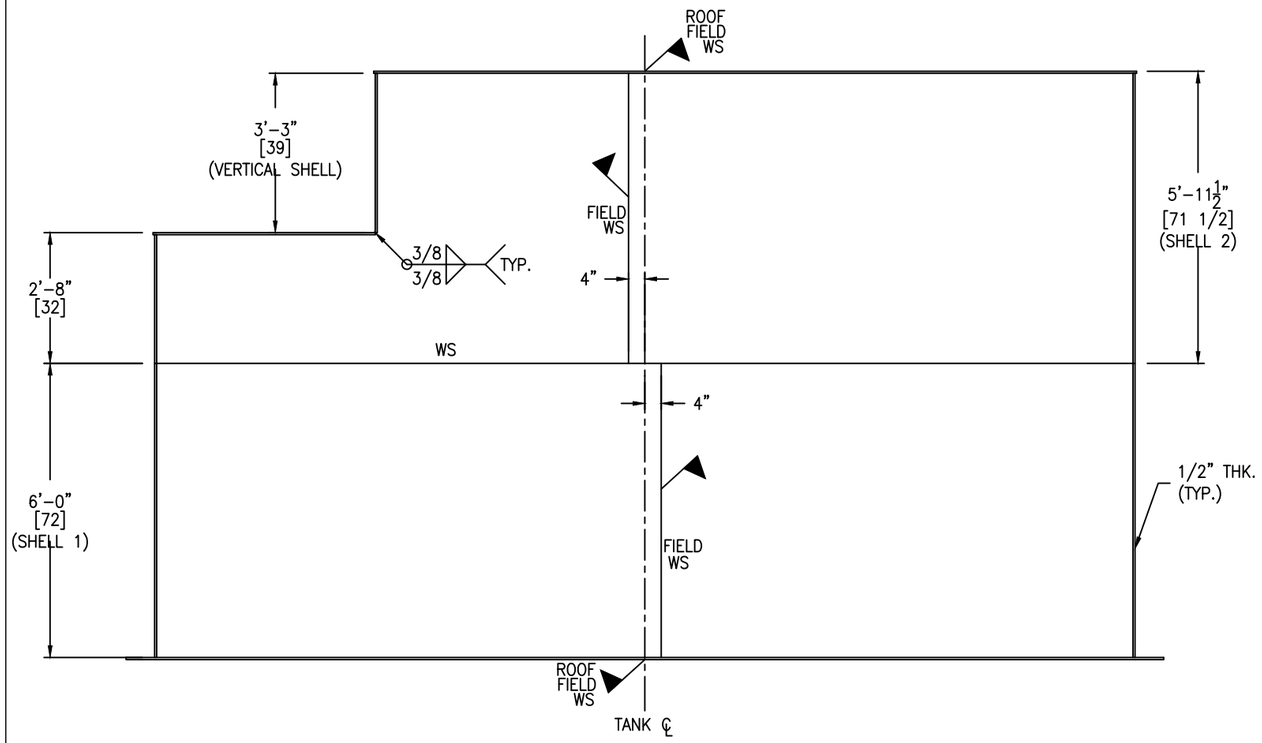

SHELL ELEVATION DETAIL

SCALE: 1/2" = 1'-0"

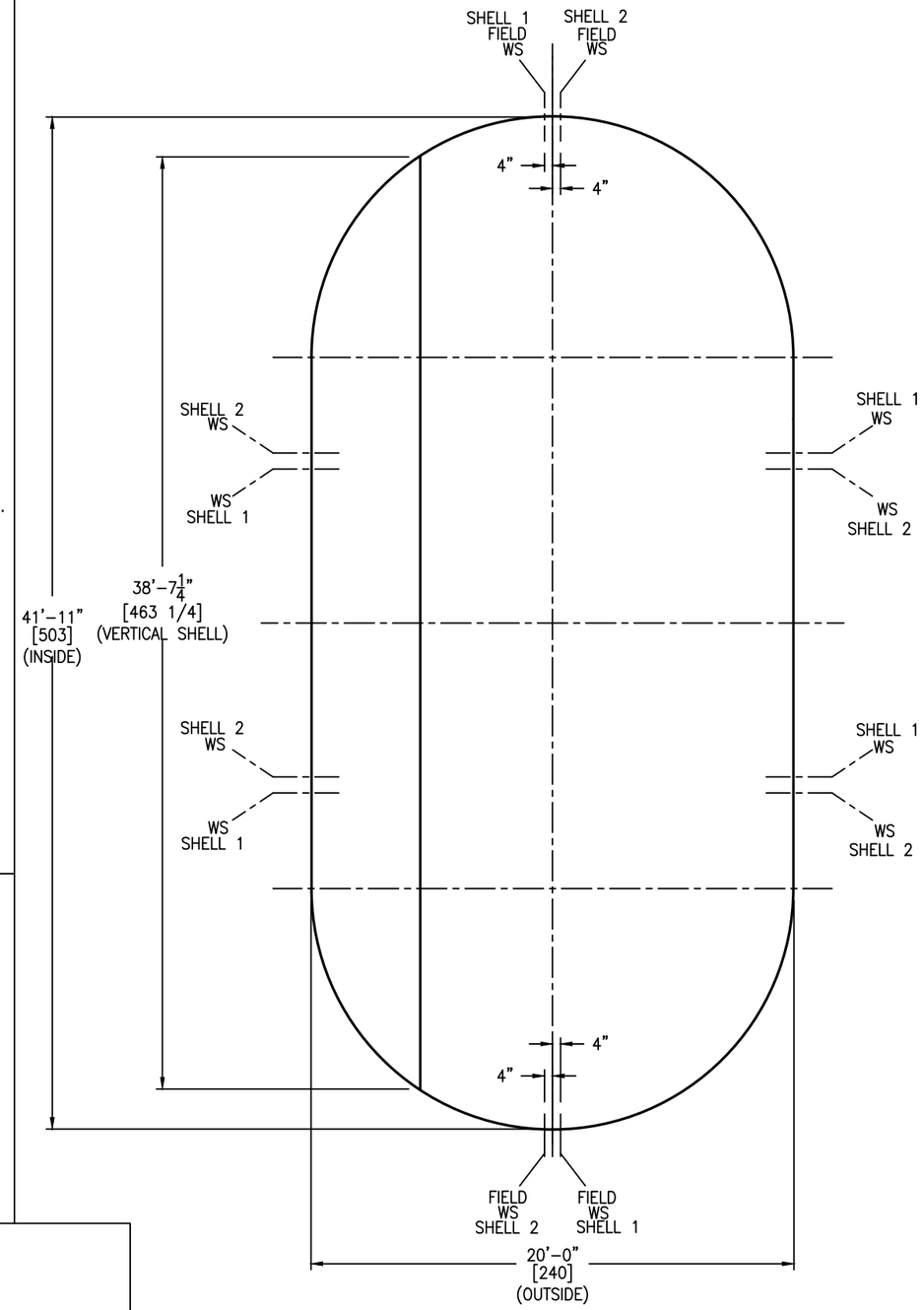

SHELL PLAN DETAIL

SCALE: 1/4" = 1'-0"

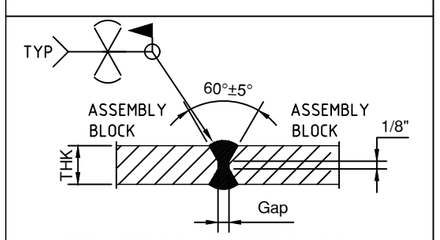

DETAIL FOR SHELL PLATE FIELD WELD

GT-FC-79

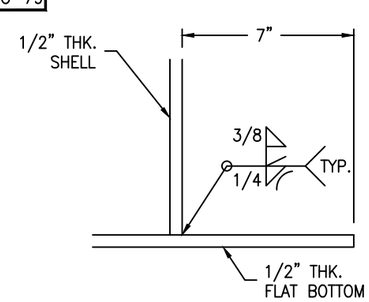

SHELL TO BOTTOM WELD DETAIL

SCALE: 3" = 1'-0"

GT-FC-79

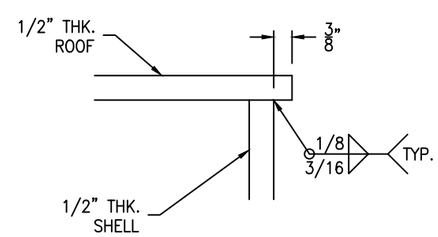

SHELL DETAIL

SCALE: 6" = 1'-0"

REV	D.BY	C.BY	DATE	DESCRIPTION
2				AS BUILT
1	RS	NP	11/28/25	CERTIFIED
0	RS	AD	9/15/25	APPROVAL

⚠ REVISIONS

Savannah Tank & Equipment Corp.
1517 Telfair Road, Savannah, GA 31415
(912) 233-8902

DRAWN BY: RS
CHK'D BY: AD
APPROVED BY: NP
SCALE: 1/4" = 1'-0"

VALMET
DISSOLVING TANK
EQUIP. #
CUST. PO #S30019941

DRAWING NO.: 089-25-5 SHT 5 OF 14 | REV. SET 1

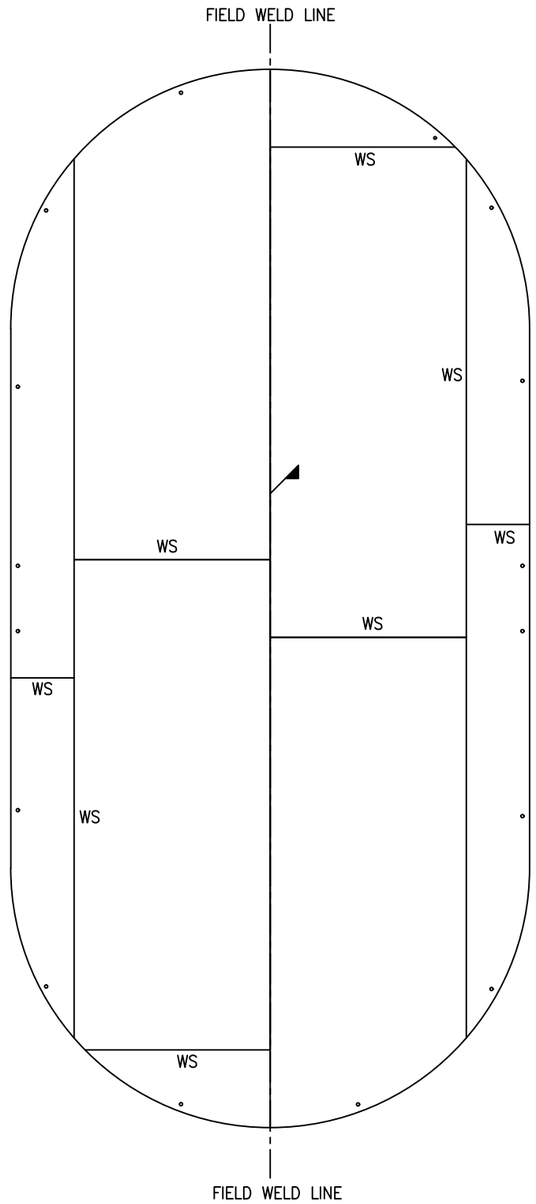

BOTTOM LAYOUT DETAIL

SCALE: 1/4" = 1'-0"

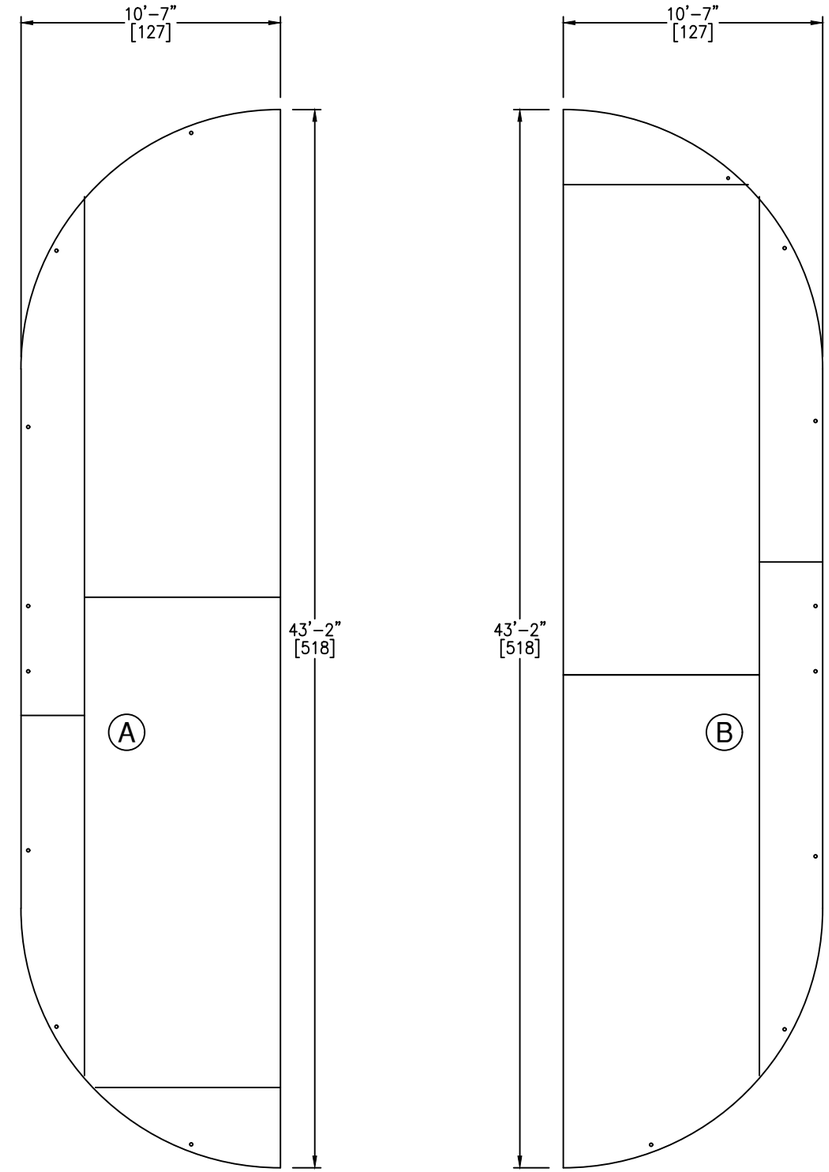

BOTTOM SHIPPING LAYOUT DETAIL

SCALE: 1/4" = 1'-0"

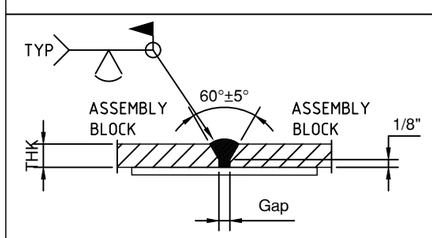

DETAIL FOR BOTTOM PLATE FIELD WELD

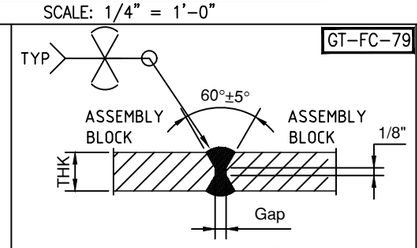

DETAIL FOR BOTTOM PLATE SHOP WELD

REV	D.BY	C.BY	DATE	DESCRIPTION
2				AS BUILT
1	RS	NP	11/28/25	CERTIFIED
0	RS	AD	9/15/25	APPROVAL

REVISIONS

Savannah Tank & Equipment Corp.
1517 Telfair Road, Savannah, GA 31415
(912) 233-8902

DRAWN BY: RS
CHK'D BY: AD
APPROVED BY: NP
SCALE: 1/4" = 1'-0"

VALMET
DISSOLVING TANK
EQUIP. #
CUST. PO #S30019941

DRAWING NO.: 089-25-6 SHT 6 OF 14 | REV. SET 1

GT-FC-79

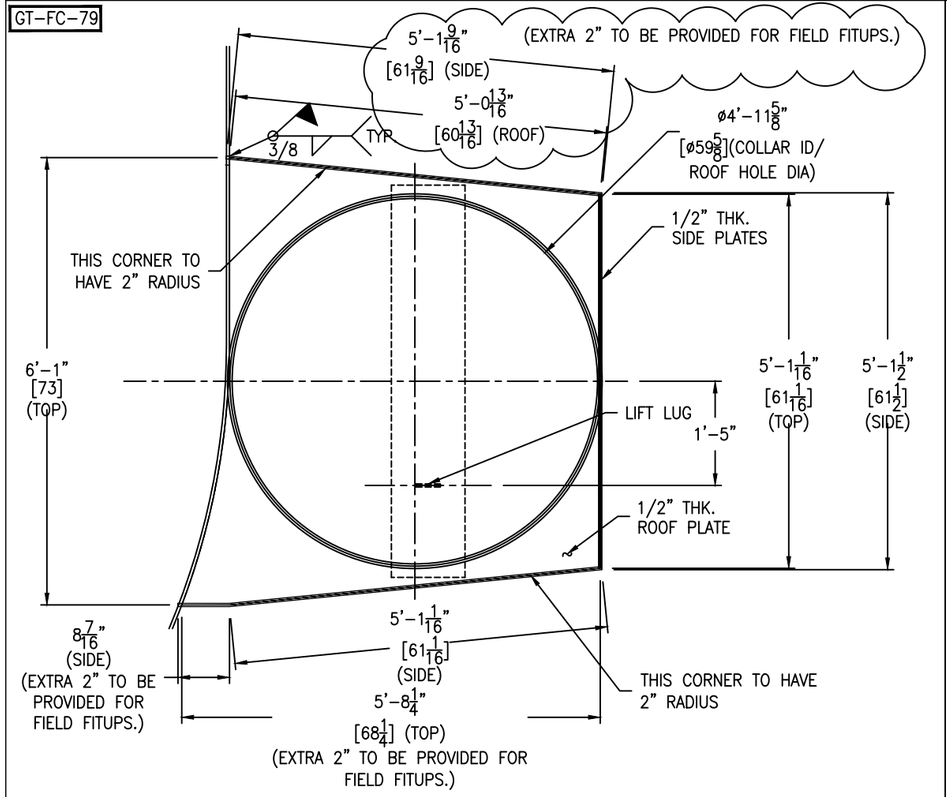

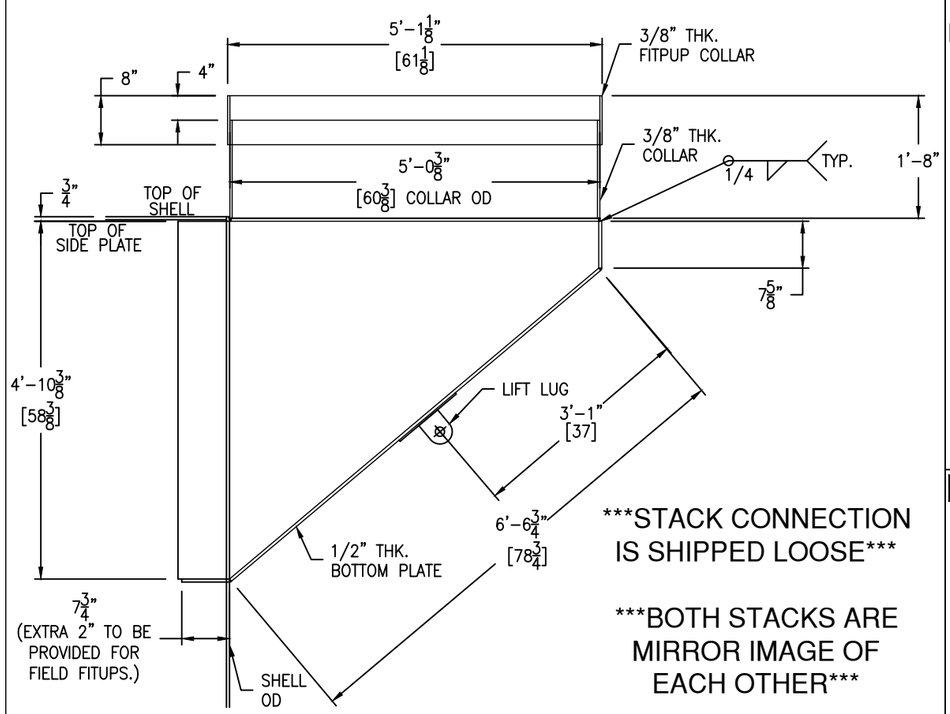

STACK CONNECTION IS SHIPPED LOOSE

BOTH STACKS ARE MIRROR IMAGE OF EACH OTHER

NOTE: DO NOT CUT HOLE IN SHELL FOR STACK CONNECTION. LOCATION TO BE ETCHED IN PLACE. HOLE IS FIELD CUT.

1 STACK CONNECTION DETAIL

(2 REQ'D) SCALE: 3/4" = 1'-0"

NOTE: COLLAR CONNECTION CENTER LINE TO BE ETCHED IN PLACE. HOLE IS FIELD CUT.

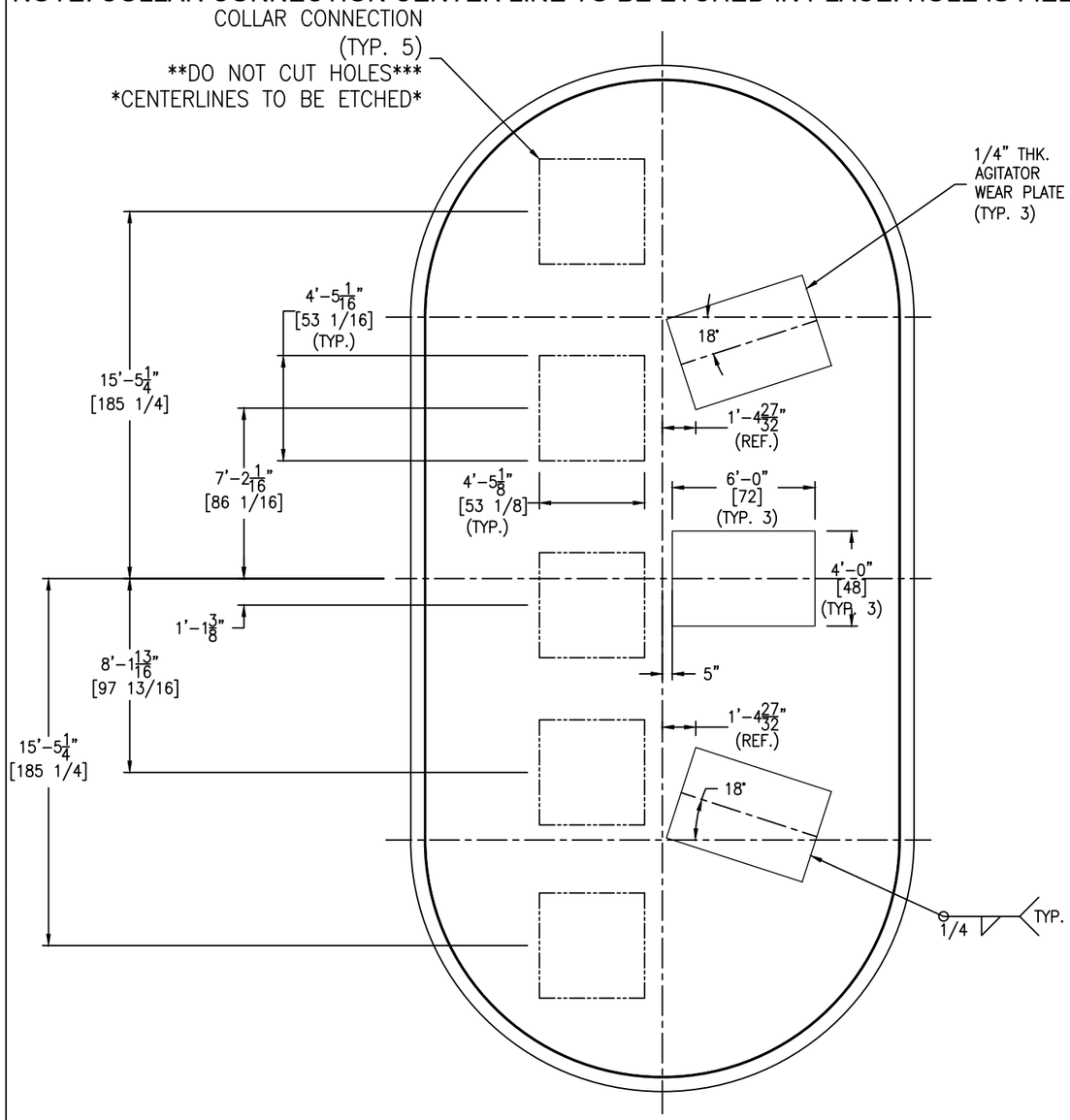

COLLAR OPENING AND AGITATOR WEAR PLATE LOCATION DETAIL

SCALE: 1/4" = 1'-0"

FC-14

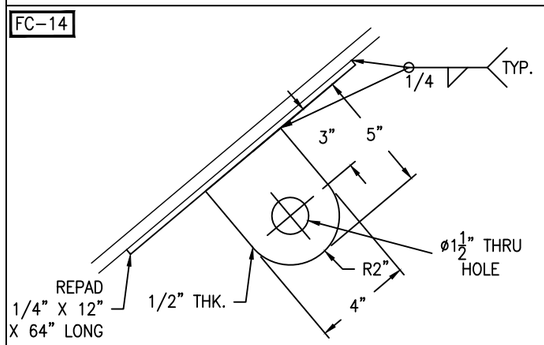

2 STACK LIFT LUG DETAIL

(2 REQ'D) SCALE: 3" = 1'-0"

REV	D.BY	C.BY	DATE	DESCRIPTION
2				AS BUILT
1	RS	NP	11/28/25	CERTIFIED
0	RS	AD	9/15/25	APPROVAL

1 REVISIONS

Savannah Tank & Equipment Corp.
1517 Telfair Road, Savannah, GA 31415
(912) 233-8902

DRAWN BY: RS
CHK'D BY: AD
APPROVED BY: NP
SCALE: 1/4" = 1'-0"

VALMET
DISSOLVING TANK
EQUIP. #
CUST. PO #S30019941

DRAWING NO.: 089-25-7 SHT 7 OF 14 | REV. SET 1

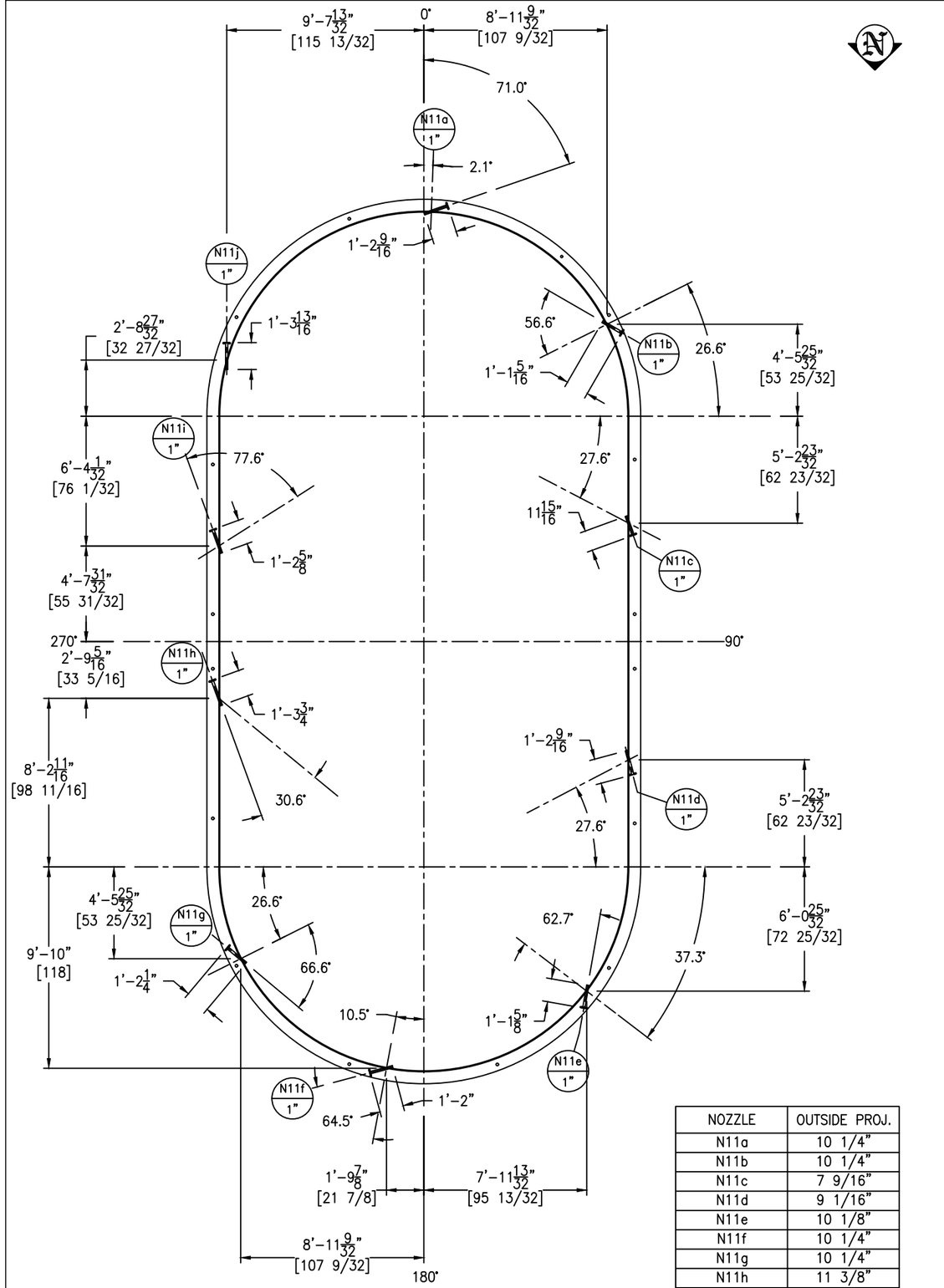

NOZZLE	OUTSIDE PROJ.
N11a	10 1/4"
N11b	10 1/4"
N11c	7 9/16"
N11d	9 1/16"
N11e	10 1/8"
N11f	10 1/4"
N11g	10 1/4"
N11h	11 3/8"
N11i	10 1/4"
N11j	10 1/4"

NOZZLE N11 LOCATION DETAIL

SCALE: 1/4" = 1'-0"

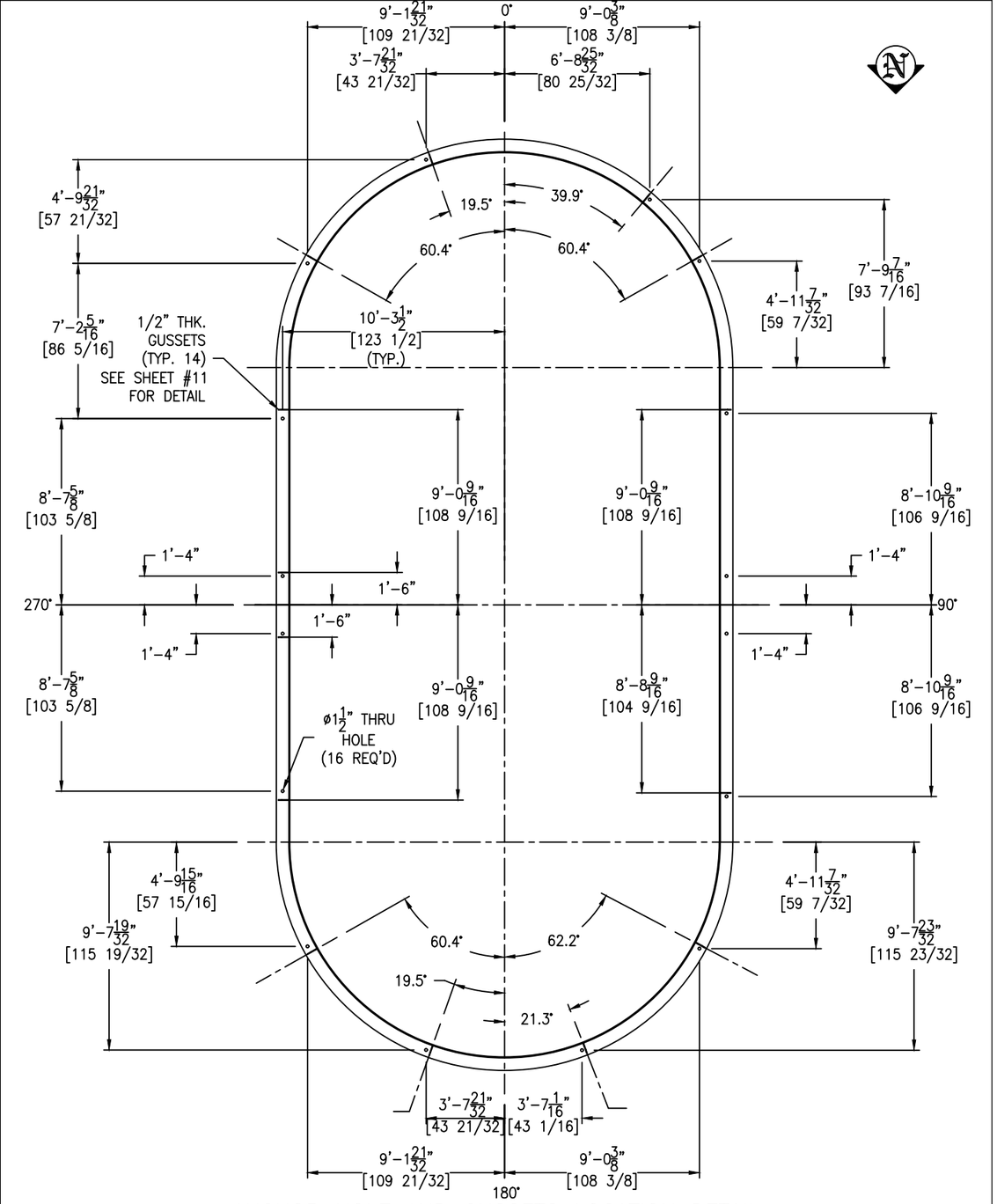

ANCHOR HOLE AND GUSSETS LOCATION DETAIL

SCALE: 1/4" = 1'-0"

REV	D.BY	C.BY	DATE	DESCRIPTION
2				AS BUILT
1	RS	NP	11/28/25	CERTIFIED
0	RS	AD	9/15/25	APPROVAL

⚠ REVISIONS

Savannah Tank & Equipment Corp.
1517 Telfair Road, Savannah, GA 31415
(912) 233-8902

DRAWN BY: RS
CHK'D BY: AD
APPROVED BY: NP
SCALE: 1/4" = 1'-0"

VALMET
DISSOLVING TANK
EQUIP. #
CUST. PO #S30019941

DRAWING NO.: 089-25-8 SHT 8 OF 14 | REV. SET 1

FC-14 FC-38
GT-FC-81

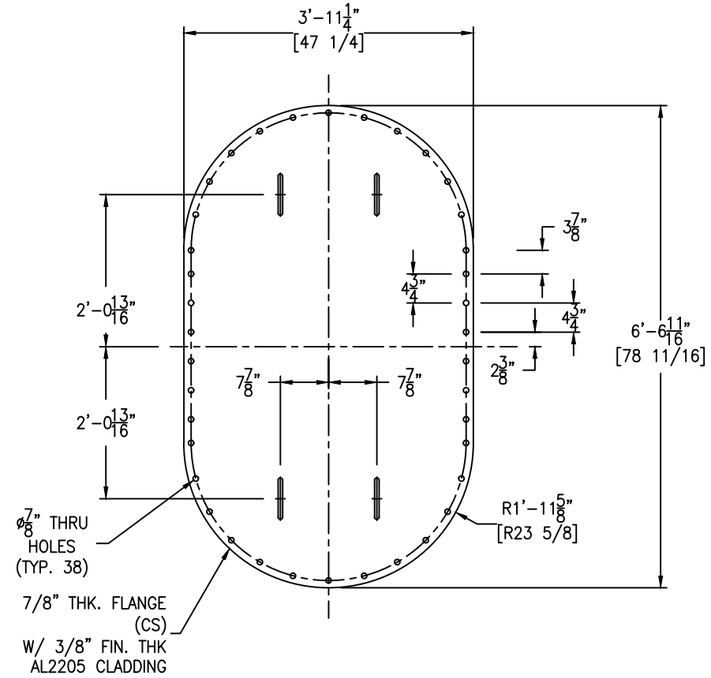

⚠1 COVER DETAIL

SCALE: 3/4" = 1'-0"

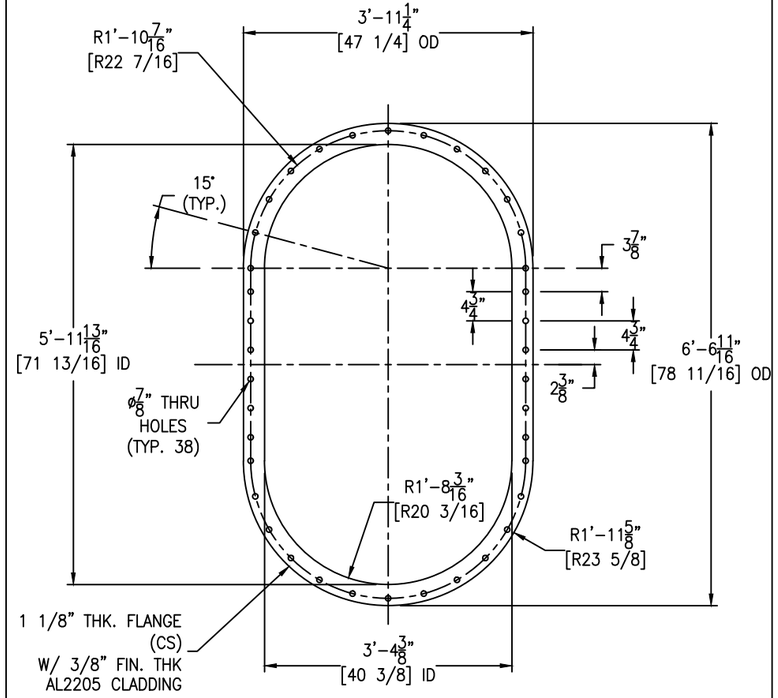

FLANGE DETAIL

SCALE: 3/4" = 1'-0"

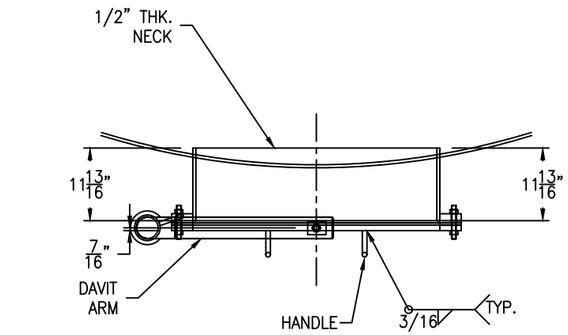

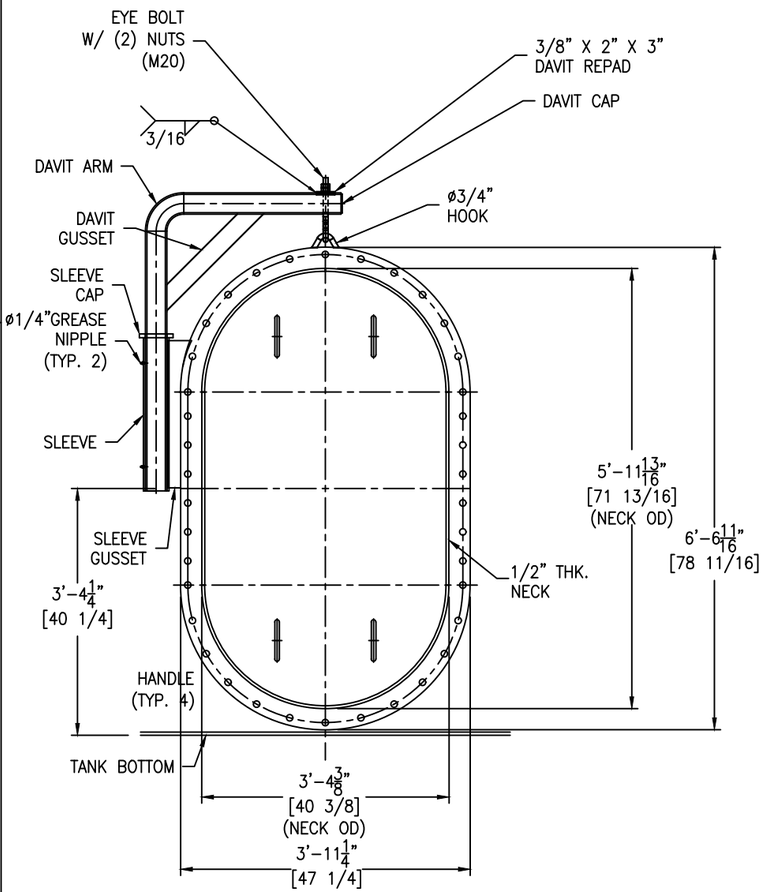

⚠1 MANWAY DETAIL

SCALE: 3/4" = 1'-0"

FC-78
GT-FC-80

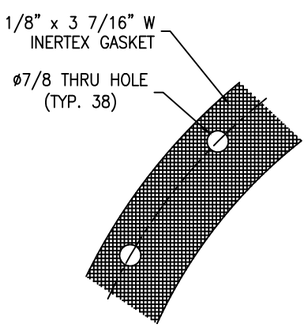

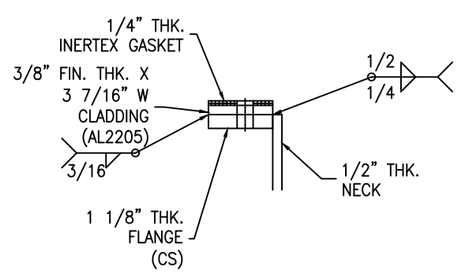

*** DRAWING NOT TO SCALE ***

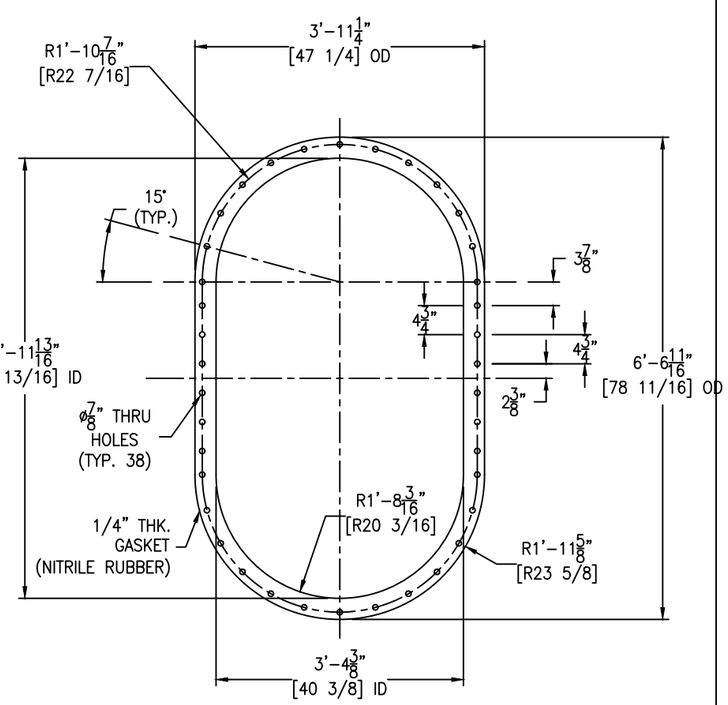

GASKET DETAIL

(QTY 1+1) SCALE: 3/4" = 1'-0"

BOLTING for MANWAY
(38+10) 3/4-10 NC x 5" FULL THRD STUDS
(76+20) 3/4-10 NC HH NUT
(76+20) 3/4" FLAT WASHER
⚠1 (1+1) SEGMENTED GASKET 1/4" THK.

REV	D.BY	C.BY	DATE	DESCRIPTION
2				AS BUILT
1	RS	NP	11/28/25	CERTIFIED
0	RS	AD	9/15/25	APPROVAL

⚠ REVISIONS

Savannah Tank & Equipment Corp.
1517 Telfair Road, Savannah, GA 31415
(912) 233-8902

DRAWN BY: RS
CHK'D BY: AD
APPROVED BY: NP
SCALE: 3/4" = 1'-0"

VALMET
DISSOLVING TANK
EQUIP. #
CUST. PO #S30019941

DRAWING NO.: 089-25-9 SHT 9 OF 14 | REV. SET 1

FC-14

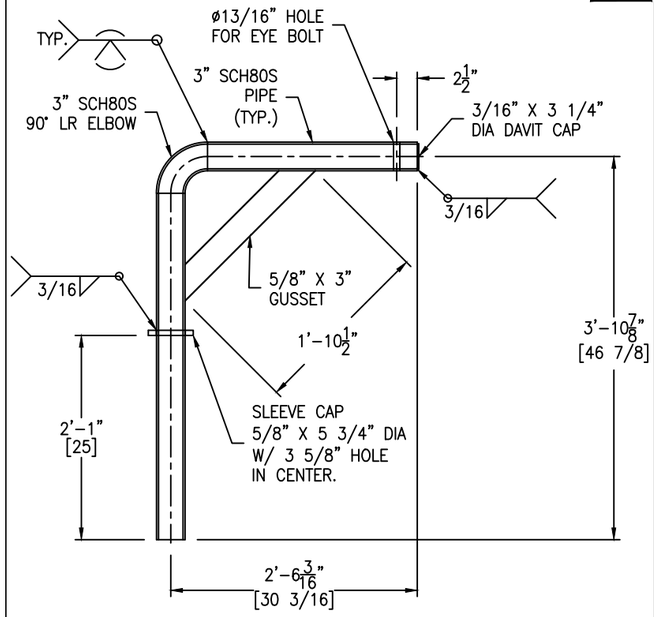

⚠1 DAVIT DETAIL

SCALE: 1" = 1'-0"

FC-14

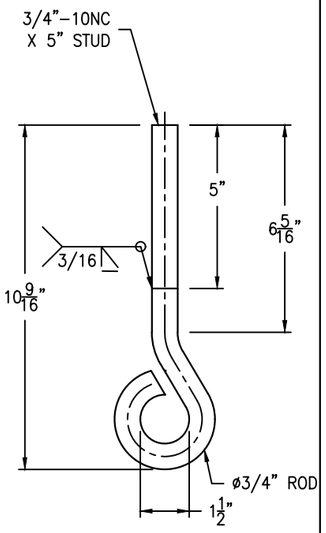

⚠1 EYE BOLT DETAIL

SCALE: 4" = 1'-0"

GT-FC-80

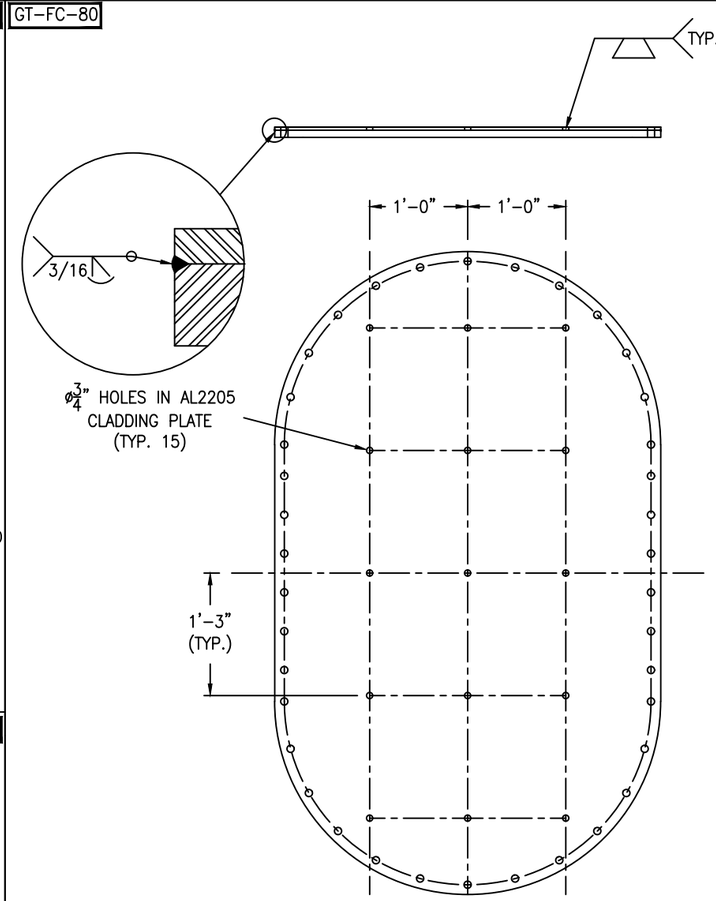

COVER WELDING DETAIL

SCALE: 3/4" = 1'-0"

FC-14

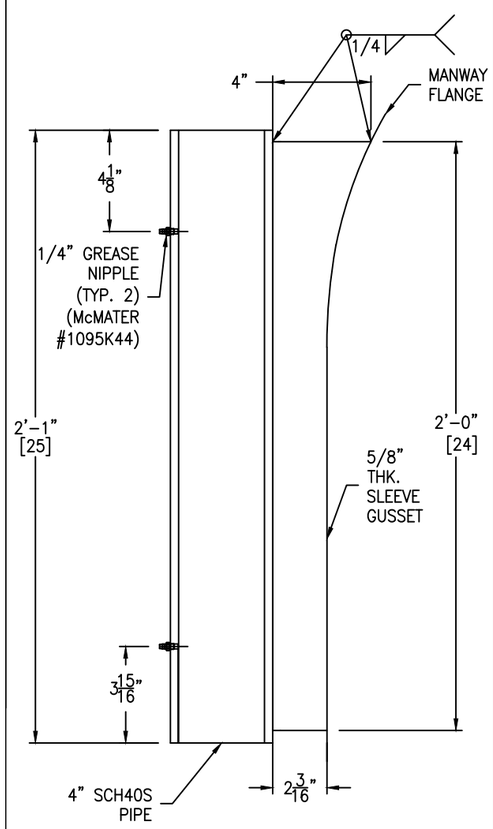

⚠1 SLEEVE DETAIL

SCALE: 3" = 1'-0"

FC-14

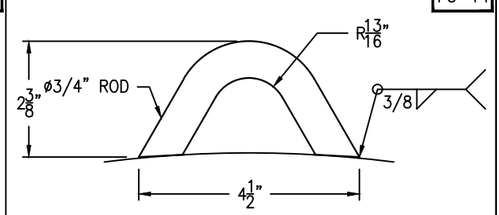

⚠1 HOOK DETAIL

SCALE: 6" = 1'-0"

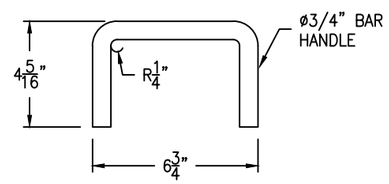

⚠1 HANDLE DETAIL

(4 REQ'D) SCALE: 3" = 1'-0"

GT-FC-80

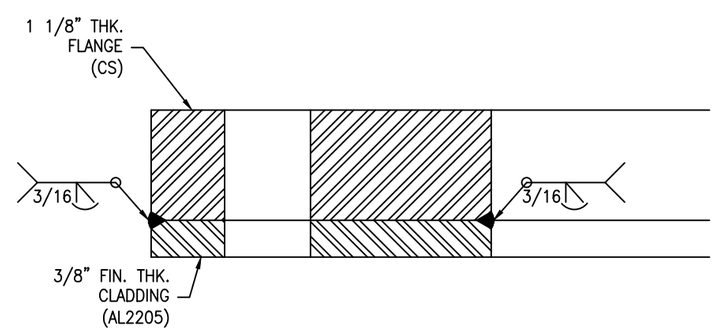

FLANGE WELDING DETAIL

SCALE: 3/4" = 1'-0"

REV	D.BY	C.BY	DATE	DESCRIPTION
2				AS BUILT
1	RS	NP	11/28/25	CERTIFIED
0	RS	AD	9/15/25	APPROVAL

⚠1 REVISIONS

Savannah Tank & Equipment Corp.
1517 Telfair Road, Savannah, GA 31415
(912) 233-8902

DRAWN BY: RS
CHK'D BY: AD
APPROVED BY: NP
SCALE: 1" = 1'-0"

VALMET
DISSOLVING TANK
EQUIP. #
CUST. PO #S30019941

DRAWING NO.:089-25-10 SHT 10 OF 14 | REV. SET 1

FC-14

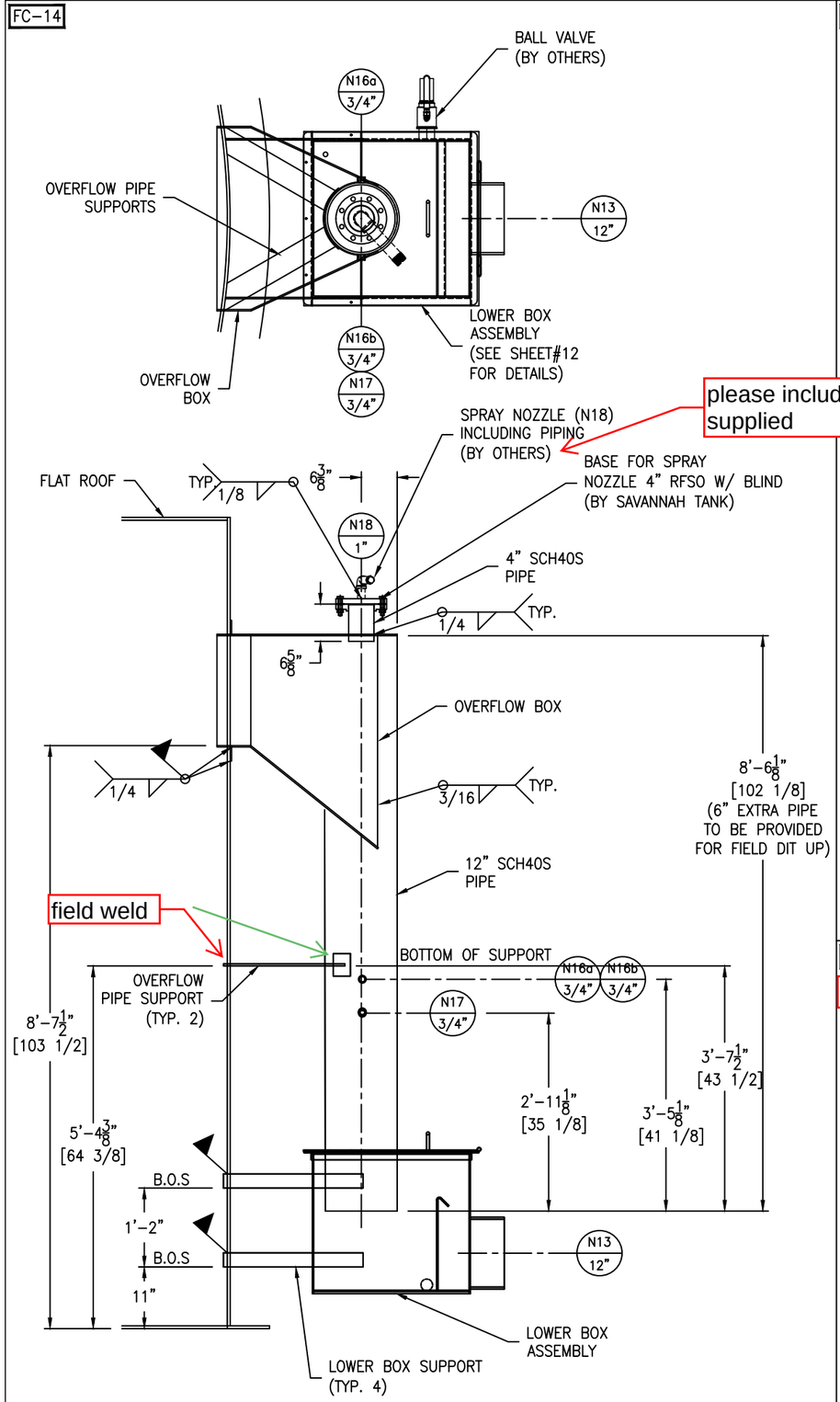

⚠(SS304/L) OVERFLOW ASSEMBLY DETAIL

SCALE: 3/4" = 1'-0"

FC-14

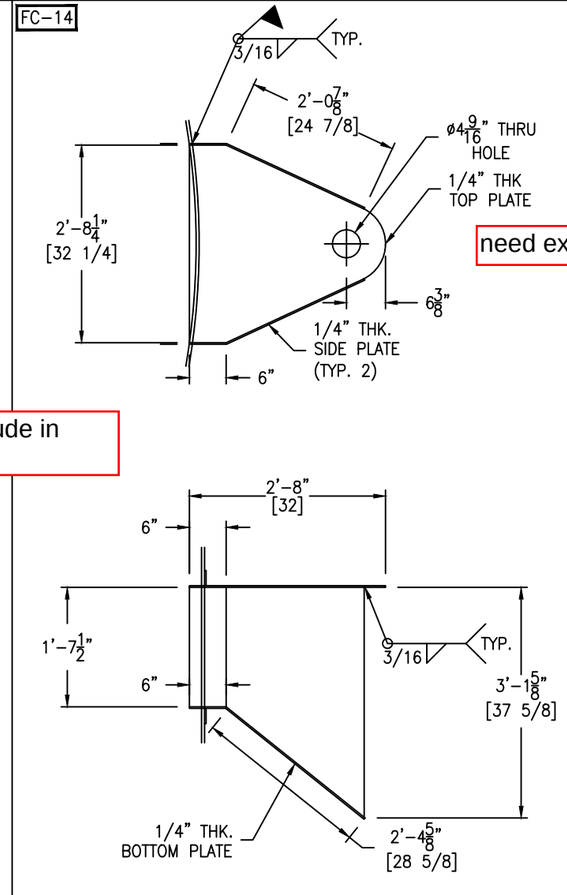

⚠OVERFLOW BOX DETAIL

SCALE: 3/4" = 1'-0"

FC-14

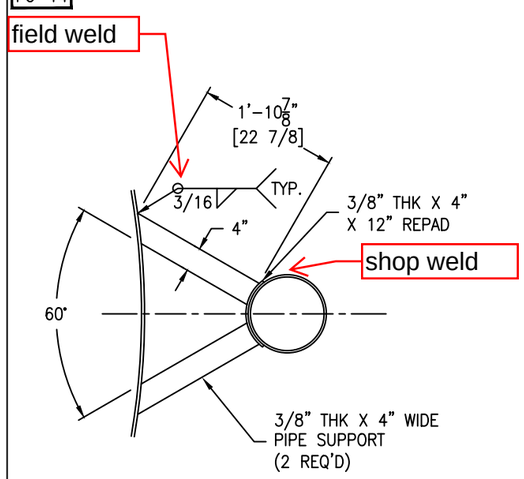

⚠OVERFLOW BOX DETAIL

SCALE: 3/4" = 1'-0"

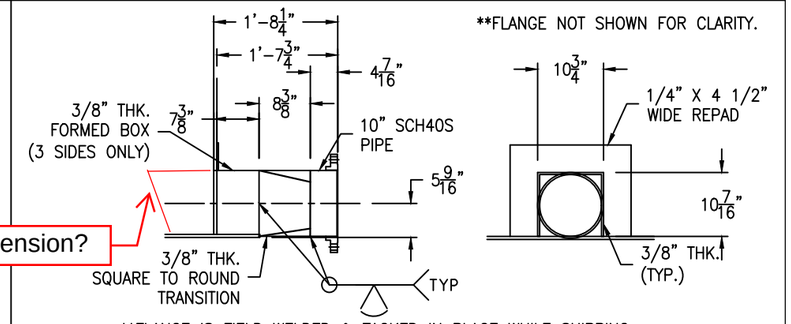

**FLANGE IS FIELD WELDED & TACKED IN PLACE WHILE SHIPPING.

⚠N5a & N5b DETAIL

(2 REQ'D) SCALE: 3/4" = 1'-0"

GT-FC-79

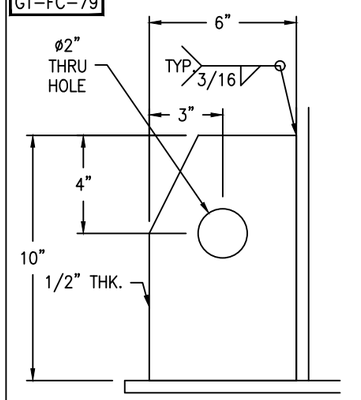

ANCHOR GUSSET DETAIL

(14 REQ'D) SCALE: 3" = 1'-0"

BOLTING FOR BLIND:
(8) BOLT, 5/8" - 11 NC X 3" HH (SS304)
(8) NUT, 5/8" - 11 NC HH (SS304)
(1) RING GASKET, 1/8" THK. X 4" 150# (PTFE)

REV	D.BY	C.BY	DATE	DESCRIPTION
2				AS BUILT
1	RS	NP	11/28/25	CERTIFIED
0	RS	AD	9/15/25	APPROVAL

⚠ REVISIONS

Savannah Tank & Equipment Corp.
1517 Telfair Road, Savannah, GA 31415
(912) 233-8902

DRAWN BY: RS
CHK'D BY: AD
APPROVED BY: NP
SCALE: 1/4" = 1'-0"

VALMET
DISSOLVING TANK
EQUIP. #
CUST. PO #S30019941

DRAWING NO.: 089-25-11 SHT 11 OF 14 | REV. SET 1

GT-FC-81
FC-14

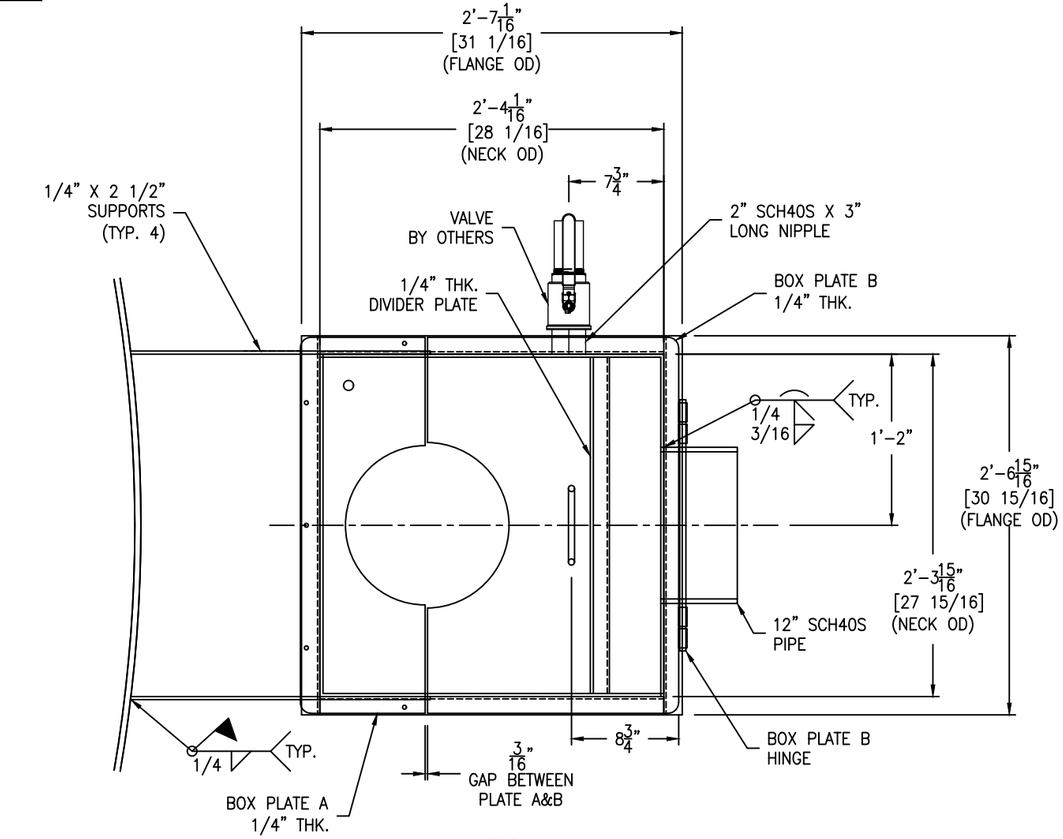

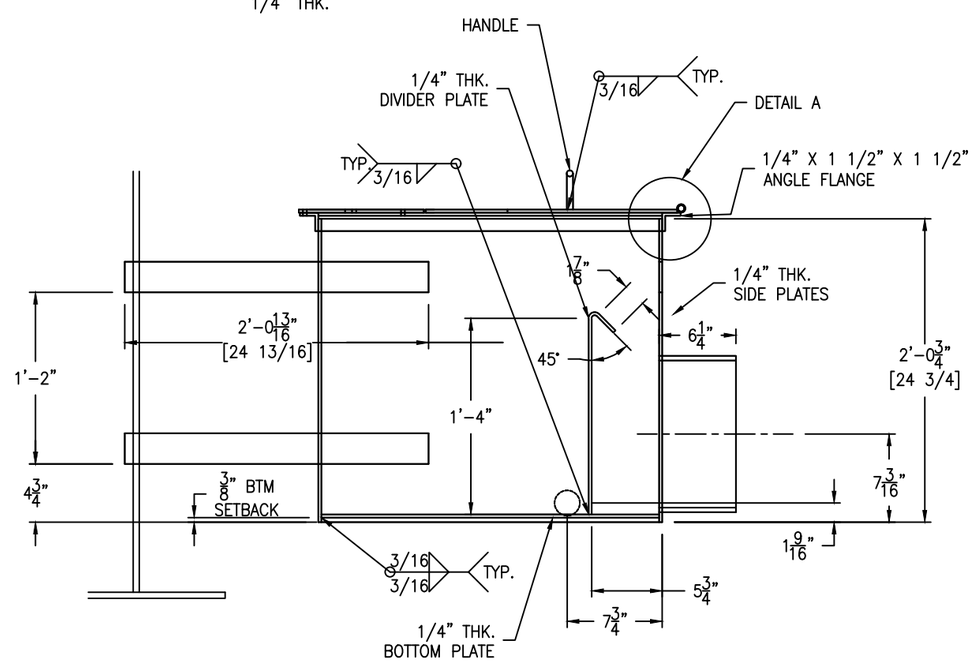

⚠(SS304/L)OVERFLOW LOWER BOX DETAIL

SCALE: 1 1/2" = 1'-0"

FC-14

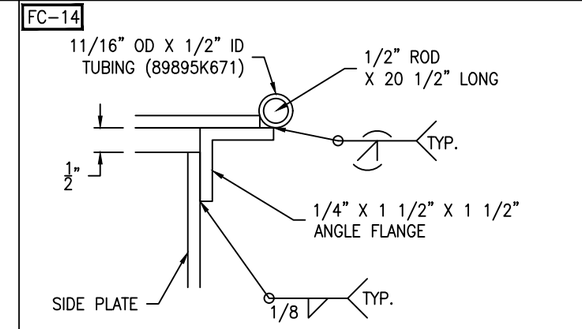

FLANGE DETAIL

SCALE: 6" = 1'-0"

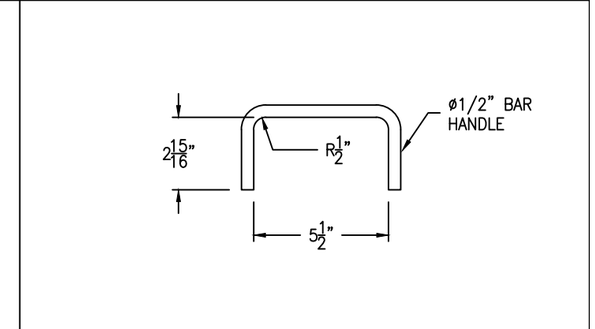

HANDLE DETAIL

SCALE: 3" = 1'-0"

FC-14

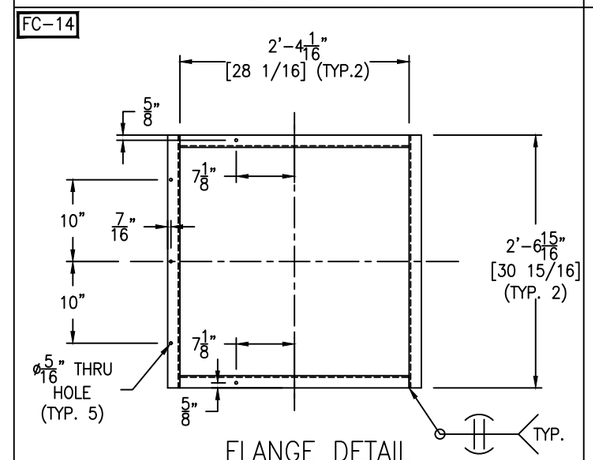

FLANGE DETAIL

SCALE: 3" = 1'-0"

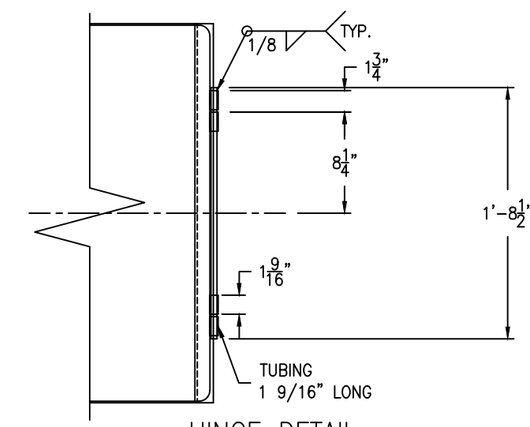

HINGE DETAIL

SCALE: 1 1/2" = 1'-0"

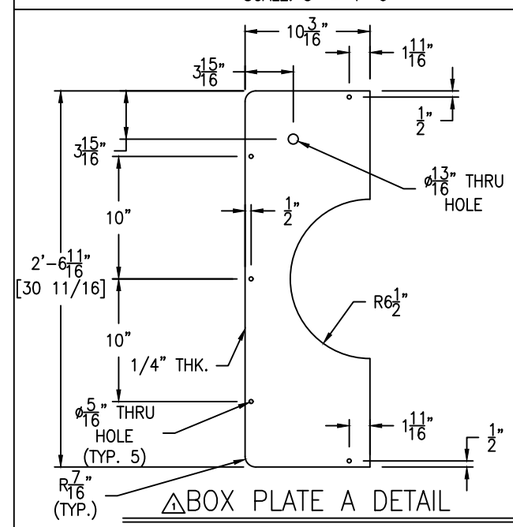

⚠BOX PLATE A DETAIL

SCALE: 1 1/2" = 1'-0"

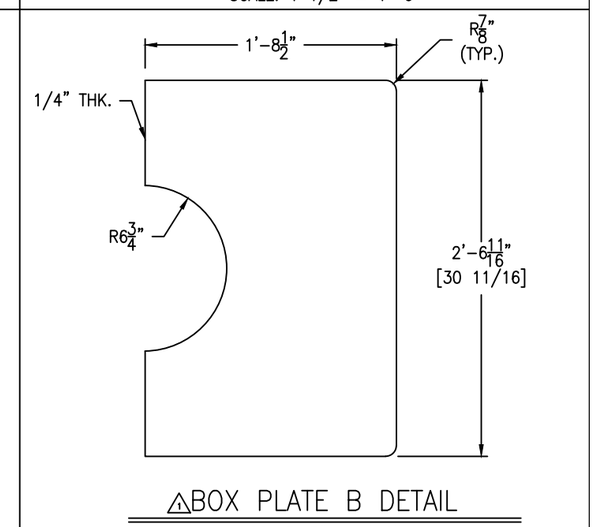

⚠BOX PLATE B DETAIL

SCALE: 3" = 1'-0"

BOLTING:
(5) BOLT, 1/4" - 20 NC X 1 1/4" HH (SS304)
(5) NUT, 1/4" - 20 NC HH (SS304)

REV	D.BY	C.BY	DATE	DESCRIPTION
2				AS BUILT
1	RS	NP	11/28/25	CERTIFIED
0	RS	AD	9/15/25	APPROVAL

⚠ REVISIONS

Savannah Tank & Equipment Corp.
1517 Telfair Road, Savannah, GA 31415
(912) 233-8902

DRAWN BY: RS
CHK'D BY: AD
APPROVED BY: NP
SCALE: 1/4" = 1'-0"

VALMET
DISSOLVING TANK
EQUIP. #
CUST. PO #S30019941

DRAWING NO.: 089-25-12 SHT 12 OF 14 | REV. SET 1

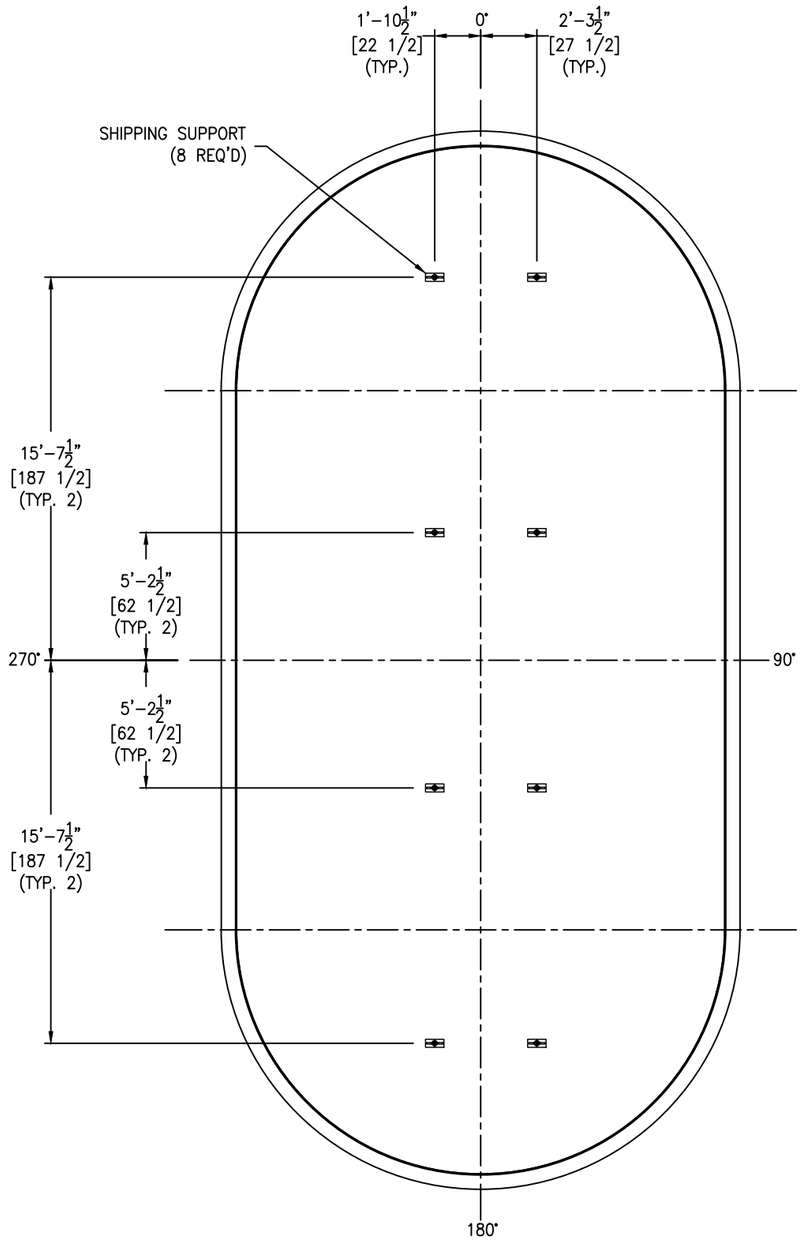

SHIPPING SUPPORT PLAN DETAIL

SCALE: 1/4" = 1'-0"

FC-39

GT-FC-79

GT-FC-81

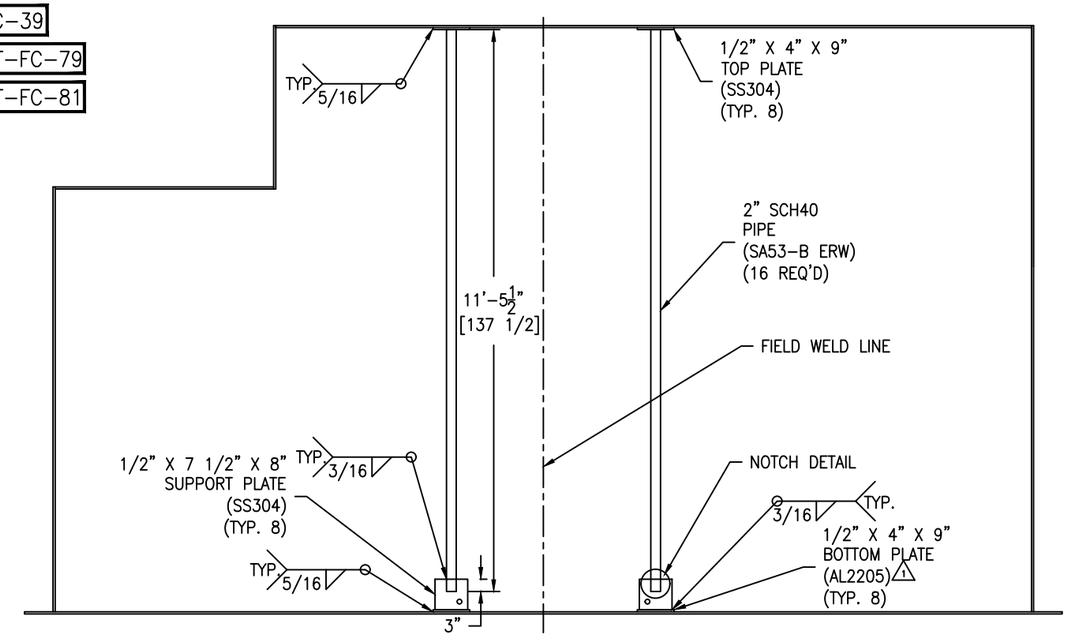

SHIPPING SUPPORT ELEVATION DETAIL

SCALE: 1/2" = 1'-0"

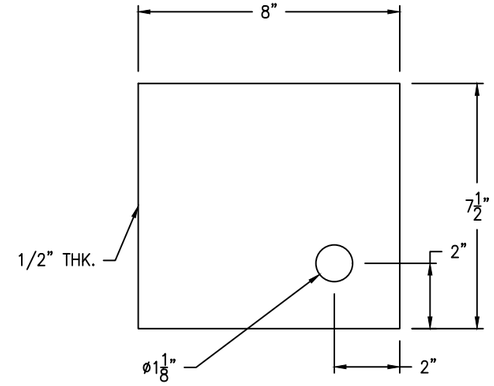

SUPPORT PLATE DETAIL

SCALE: 4" = 1'-0"

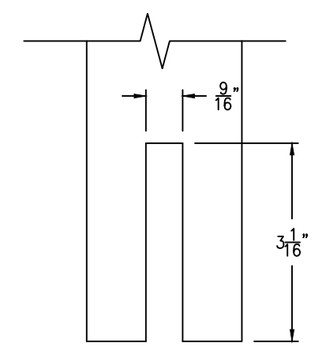

PIPE NOTCH DETAIL

SCALE: 8" = 1'-0"

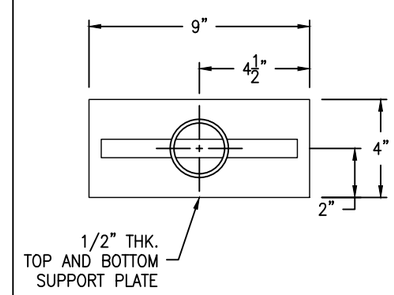

SUPPORT PLAN DETAIL

SCALE: 3" = 1'-0"

REV	D.BY	C.BY	DATE	DESCRIPTION
2				AS BUILT
1	RS	NP	11/28/25	CERTIFIED
0	RS	AD	9/15/25	APPROVAL

⚠ REVISIONS

Savannah Tank & Equipment Corp.
1517 Telfair Road, Savannah, GA 31415
(912) 233-8902

DRAWN BY: RS
CHK'D BY: AD
APPROVED BY: NP
SCALE: 1/4" = 1'-0"

VALMET
DISSOLVING TANK
EQUIP. #
CUST. PO #S30019941

DRAWING NO.:089-25-13 SHT 13 OF 14 | REV. SET 1

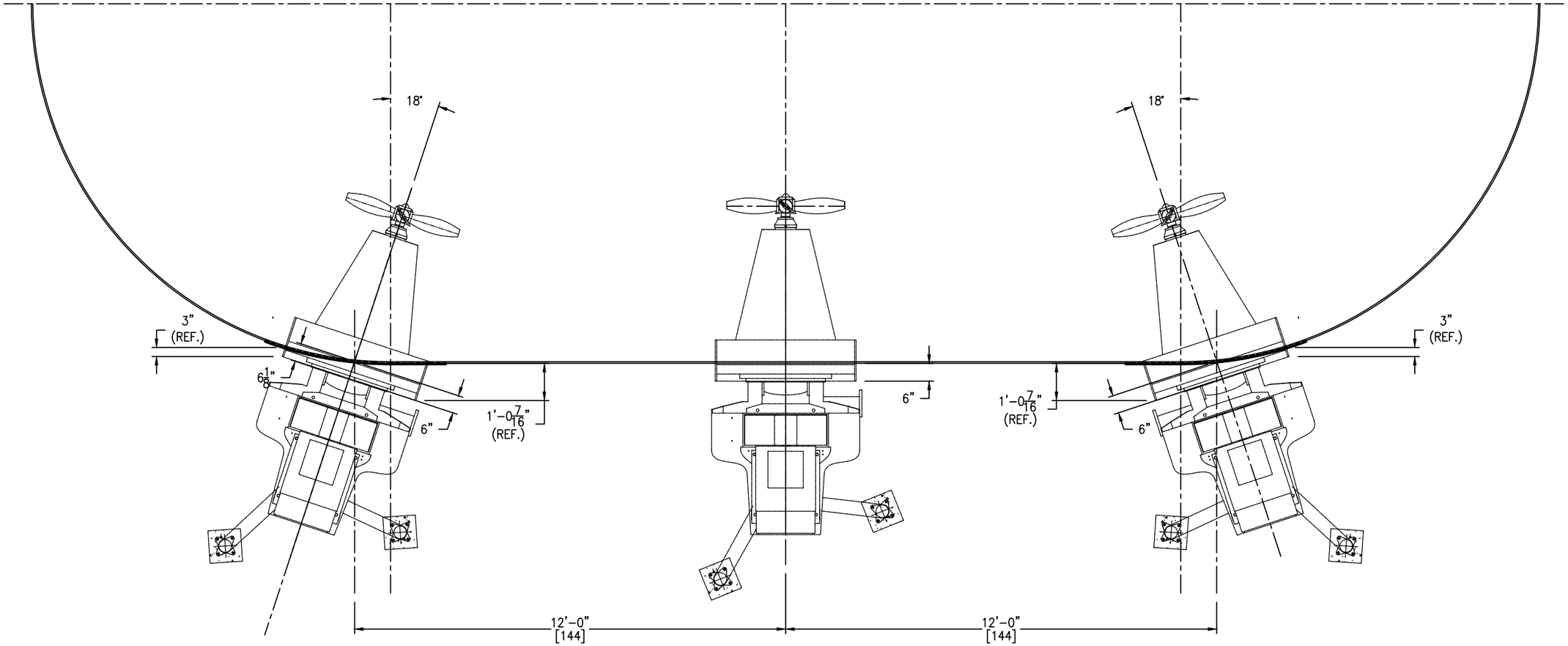

⚠1 AGITATOR DETAIL

SCALE: 1/2" = 1'-0"

*FOR REFERENCE ONLY.

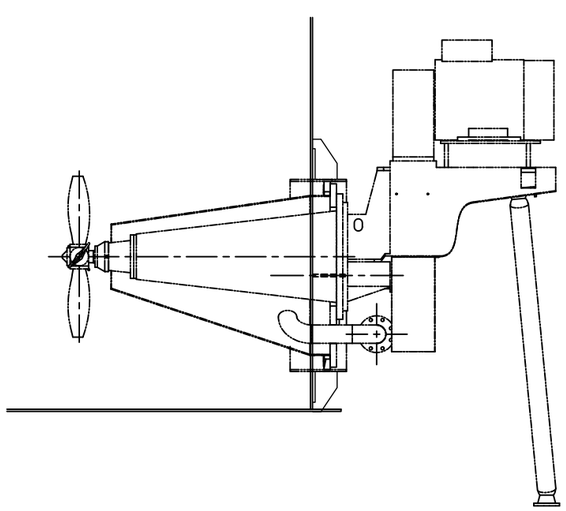

⚠1 AGITATOR ELEVATION DETAIL

SCALE: 1/2" = 1'-0"

REV	D.BY	C.BY	DATE	DESCRIPTION
2				AS BUILT
1	RS	NP	11/28/25	CERTIFIED
0	–	–	–	APPROVAL

⚠1 REVISIONS

Savannah Tank & Equipment Corp.
1517 Telfair Road, Savannah, GA 31415
(912) 233-8902

DRAWN BY: RS
CHK'D BY: AD
APPROVED BY: NP
SCALE: 1/4" = 1'-0"

VALMET
DISSOLVING TANK
EQUIP. #
CUST. PO #S30019941

DRAWING NO.: 089-25-14 SHT 14 OF 14 | REV. SET 1